Morskate®
Gedreven door techniek

FLUID COUPLINGS
FLUDEX

flender.com

FLENDER

FLE 10 CATALOG GROUP

Product catalog FLE 10.1
Torsionally Rigid Couplings

Product catalog FLE 10.3
Highly Flexible Couplings

Product catalog FLE 10.2
Flexible Couplings

Product catalog FLE 10.4
Fluid Couplings

For further coupling catalogs, see page A/6

FLUID COUPLINGS

Catalog FLE 10.4 Edition 2020 EN

Introduction		E
Torsionally Rigid Gear Couplings	ZAPEX ZW	4
	ZAPEX ZN	5
Torsionally Rigid All-Steel Couplings	N-ARPEX, ARPEX	6
Flexible Couplings	N-EUPEX	7
	RUPEX	8
	N-BIPEX	9
Highly Flexible Couplings	ELPEX-B	10
	ELPEX-S	11
	ELPEX	12
Fluid Couplings	FLUDEX	13
Appendix		A

INTRODUCTION

E

The mechanical drive train comprises individual units such as motor, gear unit and driven machine. The coupling connects these component assemblies.
As well as the transmission of rotary motion and torque, other requirements may be made of the coupling.

- Compensation for shaft misalignment with low restorative forces
- Control of characteristic angular vibration frequency and damping
- Interruption or limitation of torque
- Noise insulation, electrical insulation

Couplings are frequently chosen after the machines to be connected have already been selected. Thanks to a large number of different coupling assembly options, specified marginal conditions for clearance and connection geometry can be met from the standard range. The coupling also performs secondary functions, e.g. providing a brake disk or brake drum for operating or blocking brakes, devices to record speed or the attachment of sprockets or pulleys.

Couplings are divided into two main groups, couplings and clutches.

Clutches interrupt or limited the transmissible torque. The engaging and disengaging forces on externally operated clutches are introduced via a mechanically, electrically, hydraulically or pneumatically operating mechanism. Overload, centrifugal or freewheel clutches draw their engaging energy from the transmitted output.

Rigid couplings, designed as clamp, flanged or mechanism couplings, connect machines which must not undergo any shaft misalignment. Hydrodynamic couplings, often also called fluid or Föttinger couplings, are used as starting couplings in drives with high mass moments of inertia of the driven machine. In drive technology very often flexible, positive couplings, which may be designed to be torsionally rigid, torsionally flexible or highly flexible, are used.

Torsionally rigid couplings are designed to be rigid in a peripheral direction and flexible in radial and axial directions. The angle of rotation and torque are conducted through the coupling without a phase shift.

Torsionally flexible couplings have resilient elements usually manufactured from elastomer materials. Using an elastomer material with a suitable ShoreA hardness provides the most advantageous torsional stiffness and damping for the application. Shaft misalignment causes the resilient elements to deform.

Highly flexible couplings have large-volume (elastomer) resilient elements of low stiffness. The angle of rotation and torque are conducted through the coupling with a considerable phase shift.

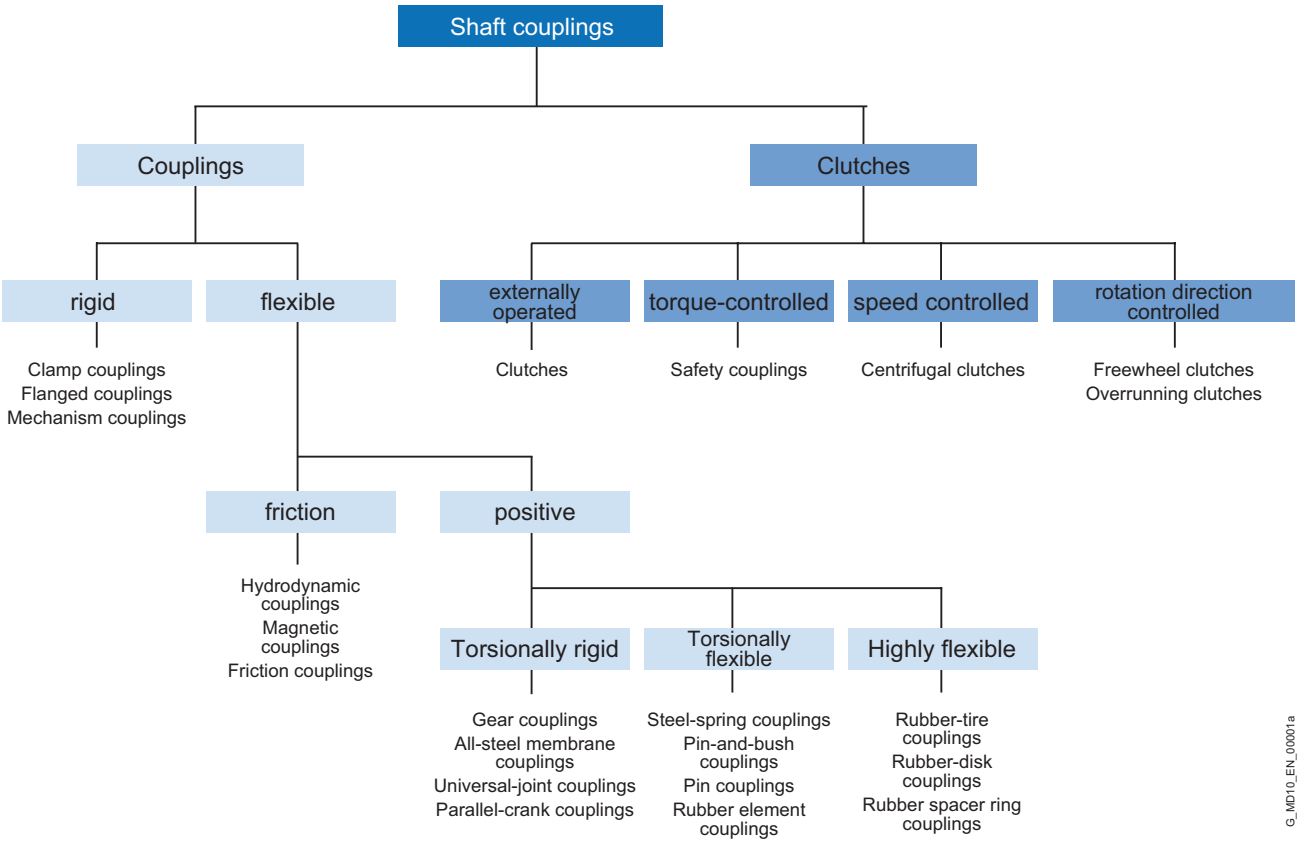
Shaft couplings
Couplings
Clutches
rigid
flexible
externally operated
torque-controlled
speed controlled
rotation direction controlled
Clamp couplings
Flanged couplings
Mechanism couplings
Clutches
Safety couplings
Centrifugal clutches
Freewheel clutches
Overrunning clutches
friction
positive
Hydrodynamic couplings
Magnetic couplings
Friction couplings
Torsionally rigid
Torsionally flexible
Highly flexible
Gear couplings
All-steel membrane couplings
Universal-joint couplings
Parallel-crank couplings
Steel-spring couplings
Pin-and-bush couplings
Pin couplings
Rubber element couplings
Rubber-tire couplings
Rubber-disk couplings
Rubber spacer ring couplings
G_MD10_EN_00001a

OUR COUPLING GROUPS AT A GLANCE

E

N-EUPEX, RUPEX and N-BIPEX

Flexible Couplings

Flexible Flender couplings have a wide range of possible applications. A broad standard modular system as well as specially designed application-specific coup-lings are available.

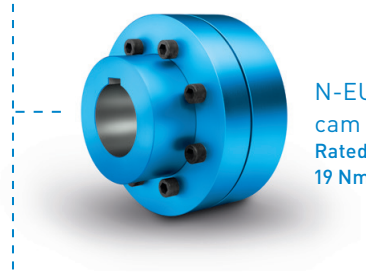

N-EUPEX
cam couplings
Rated torque:
19 Nm ... 62,000 Nm

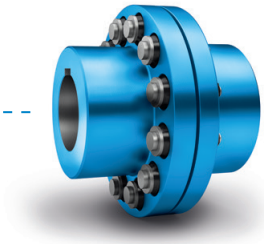

RUPEX
pin-and-bush couplings
Rated torque:
200 Nm ... 1,300,000 Nm

N-BIPEX
cam couplings
Rated torque:
12 Nm ... 4,650 Nm

ELPEX, ELPEX-B and ELPEX-S

Highly Flexible Couplings

ELPEX® couplings are free of circumferential back-lash. Their damping capacity and low torsional stiff-ness make them especially well-suited for coupling machines with strongly non-uniform torque characteristics or large shaft misalignment.

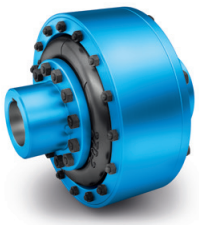

ELPEX
elastic ring couplings
Rated torque:
1,600 Nm ... 90,000 Nm

ELPEX-B
elastic tire couplings
Rated torque:
24 Nm ... 14,500 Nm

ELPEX-S
rubber disk couplings
Rated torque:
330 Nm ... 63,000 Nm

ZAPEX gear couplings and ARPEX all-steel couplings

Torsionally rigid couplings

For transmission of high torques, we offer both ARPEX all-steel couplings and ZAPEX gear couplings in a range of versions. Their purposes of application vary according to specific requirements with respect to shaft misalignment, temperature and torque.

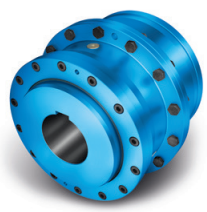

ZAPEX
gear couplings
Rated torque:
1,300 Nm ... 7,200,000 Nm

ARPEX
high Performance Couplings
Rated torque:
1,000 Nm ... 588,500 Nm

N-ARPEX and ARPEX
all-steel couplings
Rated torque:
92 Nm ... 2,000,000 Nm

BIPEX-S and SIPEX

Backlash-free couplings

The vibration-damping, electrically insulating plug-in BIPEX-S elastomer couplings and SIPEX metal bellows couplings with very high torsional stiffness deliver especially isogonal torque transmission.

BIPEX-S and SIPEX
Rated torque:
0.1 Nm ... 5,000 Nm

FLUDEX

Hydrodynamic couplings

The FLUDEX hydrodynamic fluid coupling works according to the Föttinger principle. It functions entirely free of wear.

FLUDEX
fluid Couplings
Power:
1.2 kW ... 2,500 kW

Application-specific couplings

Couplings for rail vehicles must meet high demands. Due to their high degree of standardization and wide variety, they can be used in the most diverse vehicle types.

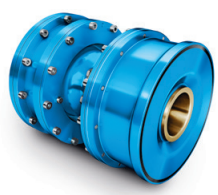

Railway coupling
Rated torque:
1,000 Nm ... 9,500 Nm

Each wind turbine coupling is designed to optimally meet the requirements of the respective wind turbine. The coupling connects the fast-running gear shaft with the generator shaft and is available for wind turbines with a capacity of up to 12 MW.

Wind turbine couplings
Rated torque:
10,000 Nm ... 60,000 Nm

TECHNICAL INFORMATION AND COUPLING SELECTION

Technical Information	**E/8**
Shaft misalignment	E/8
Balancing	E/9
Shaft-hub connections	E/11
Standards	E/12
Key to symbols	E/13
Selection of the coupling series	**E/14**
Typical coupling solutions for different example applications	E/15
Selection of the coupling size	**E/16**
Coupling load in continuous operation	E/16
Coupling load at maximum and overload conditions	E/17
Coupling load due to dynamic torque load	E/17
Checking the maximum speed	E/18
Checking permitted shaft misalignment	E/18
Checking bore diameter, mounting geometry and coupling design	E/18
Coupling behavior under overload conditions	E/18
Checking shaft-hub connection	E/18
Checking low temperature and chemically aggressive environment	E/18
Features of the standard type	**E/19**

TECHNICAL INFORMATION

E

Shaft misalignment

Shaft misalignment is the result of displacement during assembly and operation and, where machines constructed with two radial bearings each are rigidly coupled, will cause high loads being placed on the bearings. Elastic deformation of base frame, foundation and machine housing will lead to shaft misalignment which cannot be prevented, even by precise alignment.

Furthermore, because individual components of the drive train heat up differently during operation, heat expansion of the machine housings causes shaft misalignment. Poorly aligned drives are often the cause of seal, rolling bearing or coupling failure. Alignment should be carried out by specialist personnel in accordance with operating instructions.

Depending on the direction of the effective shaft misalignment a distinction is made between:

G_MD10_XX_00002

Axial misalignment

G_MD10_XX_00003

Radial misalignment

G_MD10_XX_00004

Angular misalignment

Couplings can be categorized into one of the following groups:

Single-joint couplings

Couplings with flexible elements mainly made of elastomer materials. Shaft misalignment results in deformation of the elastomer elements. The elastomer elements can absorb shaft misalignment as deformations in an axial, radial and angular direction. The degree of permissible misalignment depends on the coupling size, the speed and the type of elastomer element.
Single-joint couplings do not require an adapter and are therefore short versions.

Example:
In the case of a RUPEX RWN 198 coupling with an outer diameter of 198 mm and a speed of 1500 rpm, the permitted radial misalignment is Δ_{Kr} = 0.3 mm.

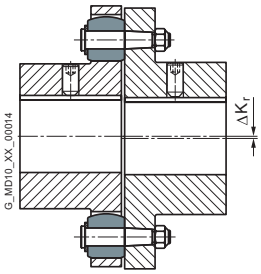

Two-joint couplings

Two-joint couplings are always designed with an adapter. The two joint levels are able to absorb axial and angular misalignment. Radial misalignment occurs via the gap between the two joint levels and the angular displacement of the joint levels. The permitted angular misalignment per joint level is frequently about 0.5°. The permitted shaft misalignment of the coupling can be adjusted via the length of the adapter. If there are more than two joint levels, it is not possible to define the position of the coupling parts relative to the axis of rotation. (The less frequently used parallel-crank couplings are an exception).

Example:
N-ARPEX ARN-6 NEN 217-6 with a shaft distance of 140 mm with a permitted radial misalignment of ΔK_r = 2.2 mm (angle per joint level 1.0°).

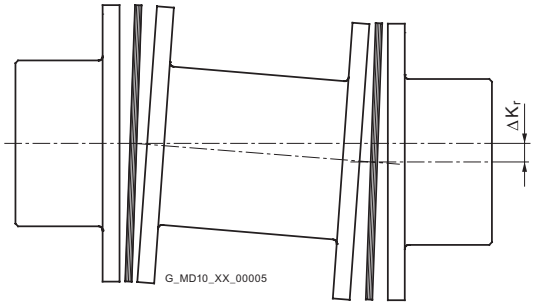

Balancing

Balance quality levels
The so-called quality level G to DIN ISO 21940 indicates a range of permitted residual imbalance from zero up to an upper limit. Applications can be grouped on the basis of similarity analysis. For many applications a coupling balance quality of G 16 is sufficient. On drives susceptible to vibration the balance quality should be G 6.3. Only in special cases is a better balance quality required.

Balancing standard in accordance with DIN ISO 21940-32
Besides the required balance quality, it is necessary to set standards which define how the mass of the parallel key is to be taken into consideration when balancing. In the past, motor rotors have frequently been balanced in accordance with the full parallel key standard. The "appropriate" balance condition of the coupling hub was described as "balancing with open keyway" or "balancing after keyseating". Today it is usual for the motor rotor, as well as the gear unit and driven machine shaft, to be balanced in accordance with the half parallel key standard.

Full parallel key standard

The parallel key is inserted in the shaft keyway, then balancing is carried out. The coupling hub must be balanced without parallel key after keyseating.

Marking of shaft and hub with "F" (for "full").

Half parallel key standard

The balancing standard normally applied today. Before balancing, a half parallel key is inserted in the shaft and another in the coupling hub. Alternatively, balancing can be carried out before cutting the keyway.

The balanced parts must be marked with an "H". This marking can be dispensed with if it is absolutely clear which parallel key standard has been applied.

No parallel key standard

Balancing of shaft and coupling hub after keyseating, but without parallel key. Not used in practice. Marking of shaft and hub with "N" (for "no").
The length of the parallel key is determined by the shaft keyway. Coupling hubs may be designed considerably shorter than the shaft.

To prevent imbalance forces caused by projecting parallel key factors when balancing in accordance with the half parallel key standard in the case of applications with high balancing quality requirements, grooved spacer rings can be fitted or stepped parallel keys used.

Flender Balancing Standard

The balancing quality level, together with the operating speed, results in the maximum permissible eccentricity of the center of gravity of the coupling or the coupling subassembly. In the Flender article number the balancing quality can be preset with the help of the order code. Additionally, also the balance quality level to DIN ISO 21940 can be preset together with the operating speed belonging to it, which then be taken as priority.

Eccentricity of center of gravity of coupling e_{coupl}	Flender balancing quality	Order code
maximum 100 µm	standard balancing	without specification
maximum 40 µm	fine balancing	W02
maximum 16 µm	micro-balancing	W03
better than 16 µm	special balancing	on request

$$e_{perm} = 9550 \cdot \frac{G}{n}$$

$$e_{coupl} \leqslant e_{perm}$$

Permitted eccentricity of center of gravity	e_{perm}	in µm
Eccentricity of center of gravity of coupling	e_{coupl}	in µm
Balancing quality level	G	in mm/s
Coupling speed	n	in rpm

TECHNICAL INFORMATION

E

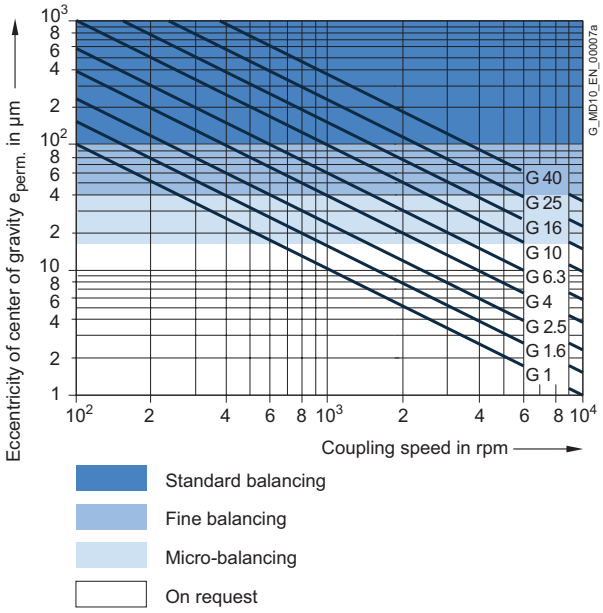

Example:
Coupling speed = 1450 rpm
required balancing quality level G 6.3

$$e_{perm} = 9550 \cdot \frac{G}{n} = 9550 \cdot \frac{6.3}{1450} \ \mu m$$

Thus, the required eccentricity of center of gravity is 41.5 µm. The fine balancing with a maximum eccentricity of center of gravity of 40 mm fulfills this requirement; therefore, the order code W02 has to be specified when ordering.

For many applications the following balancing quality recommendation applies:

Coupling	standard balancing v = DA · n/19100	fine balancing
short version with LG ≤ 3 × DA	v ≤ 30 m/s	v > 30 m/s
long version with LG > 3 × DA	v ≤ 15 m/s	v > 15 m/s

Peripheral speed	v	in mm/s
Coupling outer diameter	DA	in mm
Coupling speed	n	in rpm
Coupling length	LG	in mm

The following standards on balancing must be observed:

- couplings are balanced in subassemblies.
- hub parts without finished bore are unbalanced.
- the number of balancing levels (one- or two-level balancing) is specified by Flender.
- without special specification balancing is done in accordance with the half-parallel-key standard. Balancing in accordance with the full-parallel-key standard must be specified in the order number.
- For FLUDEX couplings special balancing standards specified in Section 13 apply.
- ARPEX couplings in standard balancing quality are unbalanced. Thanks to steel components machined all over and precisely guided adapters the balancing quality of standard balancing is nearly always adhered to.

Shaft-hub connections

The bore and the shaft-hub connection of the coupling are determined by the design of the machine shaft. In the case of IEC standard motors, the shaft diameters and parallel key connections are specified in accordance with DIN EN 50347. For diesel motors, the flywheel connections are frequently specified in accordance with SAE J620d or DIN 6288. Besides the very widely used connection of shaft and hub with parallel keys to DIN 6885 and cylindrically bored hubs, couplings with Taper clamping bushes, clamping sets, shrink-fit connections and splines to DIN 5480 are common.

The form stability of the shaft/hub connection can only be demonstrated when shaft dimensions and details of the connection are available. The coupling torques specified in the tables of power ratings of the coupling series do not apply to the shaft-hub connection unrestrictedly.

In the case of the shaft-hub connection with parallel key, the coupling hub must be axially secured, e.g. with a set screw or end washer. The parallel key must be secured against axial displacement in the machine shaft.

All Flender couplings with a finished bore and parallel keyway are designed with a set screw. Exceptions are some couplings of the FLUDEX series, in which end washers are used. During assembly, Taper clamping bushes are frictionally connected to the machine shaft.

TECHNICAL INFORMATION

E

Standards

Machines

2006/42/EG	EC Machinery Directive
2014/34/EU	ATEX Directive – Manufacturer
1999/92/EG	ATEX Directive – Operator – and ATEX Guideline to Directive 1999/92/EC
DIN EN 80079-36	Non-electrical equipment for use in potentially explosive atmospheres
DIN EN 1127	Explosive atmospheres, explosion prevention and protection
DIN EN 50347	General-purpose three-phase induction motors having standard dimensions and outputs

Couplings

DIN 740	Flexible shaft couplings Part 1 and Part 2
VDI Guideline 2240	Shaft couplings - Systematic subdivision according to their properties VDI Technical Group Engineering Design 1971
API 610	Centrifugal Pumps for Petroleum, Chemical and Gas Industry Services
API 671	Special Purpose Couplings for Petroleum, Chemical and Gas Industry Services
ISO 10441	Petroleum, petrochemical and natural gas industries – Flexible couplings for mechanical power transmission-special-purpose applications
ISO 13709	Centrifugal pumps for petroleum, petrochemical and natural gas industries

Balancing

DIN ISO 21940	Requirements for the balancing quality of rigid rotors
DIN ISO 21940-32	Mechanical vibrations; standard governing the type of parallel key during balancing of shafts and composite parts

Shaft-hub connections

DIN 6885	Driver connections without taper action – parallel keys – keyways
SAE J620d	Flywheels for industrial engines ...
DIN 6288	Reciprocating internal combustion engines Dimensions and requirements for flywheels and flexible couplings
ASME B17.1	Keys and keyseats
DIN EN 50347	General-purpose three-phase induction motors with standard dimensions and output data
BS 46-1:1958	Keys and keyways and taper pins Specification

Key to symbols

Name	Symbols	Unit	Explanation
Torsional stiffness, dynamic	C_{Tdyn}	Nm/rad	For calculating torsional vibration
Excitation frequency	f_{err}	Hz	Excitation frequency of motor or driven machine
Moment of inertia	J	kgm^2	Moment of inertia of coupling sides 1 and 2
Axial misalignment	ΔK_a	mm	Axial misalignment of the coupling halves
Radial misalignment	ΔK_r	mm	Radial misalignment of the coupling halves
Angular misalignment	ΔK_w	°	Angular misalignment of the coupling halves
Service factor	FB		Factor expressing the real coupling load as a ratio of the nominal coupling load
Frequency factor	FF		Factor expressing the frequency dependence of the fatigue torque load
Temperature factor	FT		Factor taking into account the reduction in strength of flexible rubber materials at a higher temperature
Weight	m	kg	Weight of the coupling
Rated speed	n_N	rpm	Coupling speed
Maximum coupling speed	n_{Kmax}	rpm	Maximum permissible coupling speed
Rated power	P_N	kW	Rated output on the coupling, usually the output of the driven machine
Rated torque	T_N	Nm	Rated torque as nominal load on the coupling
Fatigue torque	T_W	Nm	Amplitude of the dynamic coupling load
Maximum torque	T_{max}	Nm	More frequently occurring maximum load, e.g. during starting
Overload torque	T_{OL}	Nm	Very infrequently occurring maximum load, e.g. during short circuit or blocking conditions
Rated coupling torque	T_{KN}	Nm	Torque which can be transmitted as static torque by the coupling over the period of use.
Maximum coupling torque	T_{Kmax}	Nm	Torque which can be frequently transmitted (up to 25 times an hour) as maximum torque by the coupling.
Coupling overload torque	T_{KOL}	Nm	Torque which can very infrequently be transmitted as maximum torque by the coupling.
Fatigue coupling torque	T_{KW}	Nm	Torque amplitude which can be transmitted by the coupling as dynamic torque at a frequency of 10 Hz over the period of use.
Resonance factor	V_R		Factor specifying the torque increase at resonance
Temperature	T_a	°C	Ambient temperature of the coupling in operation
Damping coefficient	Ψ	psi	Damping parameter

SELECTION OF THE COUPLING SERIES

E

The coupling series is frequently determined by the driven machine and the design of the drive train. Common selection criteria are listed below and assigned to coupling properties, which are used to select the coupling series. Additionally, the price of the coupling and availability are important criteria for determining the coupling series to be used.

The FLUDEX series operates positively and transmits the torque with the aid of a flowing oil or water filling.

FLUDEX couplings are used to reduce starting and/or overload torques. During starting, the motor may, for example, run up within a very short time; because of the FLUDEX coupling, the drive train with the driven machine may accelerate after a delay and without increased torque load.

The FLUDEX coupling cannot compensate for shaft misalignment and is therefore designed in combination with a displacement coupling, a cardan shaft or a belt drive. The displacement coupling may be selected in accordance with the criteria described below.

Selection criteria

	Torque range Rated coupling torque T_{KN}	Speed range Peripheral speed $v_{max} = DA \cdot n_{max}/19100$	Torsional stiffness torsionally rigid	torsionally flexible	Highly flexible	Operating temperature range
ZAPEX	850 ... 7200000 Nm	60 m/s	■	–	–	-20 ... +80 °C
N-ARPEX	350 ... 2000000 Nm	110 m/s	■	–	–	-50 ... +280 °C
ARPEX	92 ... 2000000 Nm	100 m/s	■	–	–	-40 ... +280 °C
N-EUPEX	19 ... 62000 Nm	36 m/s	–	■	–	-50 ... +100 °C
N-EUPEX DS	19 ... 21200 Nm	36 m/s	–	■	–	-30 ... +80 °C
RUPEX	200 ... 1300000 Nm	60 m/s	–	■	–	-50 ... +100 °C
N-BIPEX	12 ... 4650 Nm	45 m/s	–	■	–	-50 ... +100 °C
ELPEX-B	24 ... 14500 Nm	35 m/s	–	–	■	-50 ... +70 °C
ELPEX-S	330 ... 63000 Nm	66 m/s	–	–	■	-40 ... +120 °C
ELPEX	1600 ... 90000 Nm	60 m/s	–	–	■	-40 ... +80 °C

E

Typical coupling solutions for different example applications

The specified application factors are recommendations; regulations, rules and practical experience take priority as assessment criteria.
No application factor need be taken into account with FLUDEX couplings.

In the case of highly flexible couplings of the ELPEX, ELPEX-S and ELPEX-B series, deviating application factors are stated in the product descriptions.
FLUDEX couplings are mostly mounted on the high-speed gear shaft.

Example applications	Application factor FB
Electric motor without gear unit	
Centrifugal pumps	1.0
Piston pumps	1.5
Vacuum pumps	1.5
Fans with T_N less than 75 Nm	1.5
Fans with T_N from 75 to 750 Nm	1.75
Fans with T_N larger than 750 Nm	1.75
Blowers	1.5
Frequency converters / generators	1.25
Reciprocating compressors	1.75
Screw-type compressors	1.5
Internal-combustion engine without gear unit	
Generators	1.75
Pumps	1.5
Fans	1.75
Hydraulic pumps, excavators, construction machines	1.5
Compressors / screw-type compressors	1.5
Agricultural machinery	1.75
Other	
Turbine gear units	1.5
Hydraulic motor - gear unit	1.25
Electric motor with gear unit	
Chemical industry	
Extruders	1.5
Pumps - centrifugal pumps	1.0
Pumps - piston pumps	1.75
Pumps - plunger pumps	1.5
Reciprocating compressors	1.75
Calenders	1.5
Kneaders	1.75
Cooling drums	1.25
Mixers	1.25
Stirrers	1.25
Toasters	1.25
Drying drums	1.25
Centrifuges	1.25
Crushers	1.5
Power generation and conversion	
Compressed air, reciprocating compressors	1.75

Example applications	Application factor FB
Compressed air, screw-type compressors	1.25
Air - Blowers	1.5
Air - Cooling tower fans	1.5
Air - Turbine blowers	1.5
Generators, converters	1.25
Welding generators	1.25
Metal production, iron and steel works	
Plate tilters	1.5
Ingot pushers	1.75
Slabbing mill	1.75
Coiling machines	1.5
Roller straightening machines	1.5
Roller tables	1.75
Shears	1.75
Rollers	1.75
Metal working machines	
Plate bending machines	1.5
Plate straightening machines	1.5
Hammers	1.75
Planing machines	1.75
Presses, forging presses	1.75
Shears	1.5
Grinding machines	1.25
Punches	1.5
Machine tools: Main drives	1.5
Machine tools: Auxiliary drives	1.25
Food industry	
Filling machines	1.25
Kneading machines	1.5
Mashers	1.5
Sugar cane production	1.5
Production machines	
Construction machines, hydraulic pumps	1.25
Construction machines, traversing gears	1.5
Construction machines, suction pumps	1.5
Construction machines, concrete mixers	1.5
Printing machines	1.25
Woodworking - barking drums	1.5
Woodworking - planing machines	1.5

Example applications	Application factor FB
Woodworking - reciprocating saws	1.5
Grinding machines	1.5
Textile machines - winders	1.5
Textile machines - printing machines	1.5
Textile machines - tanning vats	1.5
Textile machines - shredders	1.5
Textile machines - looms	1.5
Packaging machines	1.5
Brick molding machines	1.75
Transport and logistics	
Passenger transport - elevators	1.5
Passenger transport - escalators	1.5
Conveyor systems - bucket elevators	1.5
Conveyor systems - hauling winches	1.5
Conveyor systems - belt conveyors	1.5
Conveyor systems - endless-chain conveyors	1.5
Conveyor systems - circular conveyors	1.5
Conveyor systems - screw conveyors	1.5
Conveyor systems - inclined hoists	1.5
Crane traversing gear	1.5
Hoisting gear	1.5
Crane lifting gear	2.0
Crane traveling gear	1.5
Crane slewing gear	1.5
Crane fly jib hoists	1.5
Cable railways	1.5
Drag lifts	1.5
Winches	1.5
Cellulose and paper	
Paper-making machines, all	1.5
Pulper drives	1.5
Cement industry	
Crushers	1.75
Rotary furnaces	1.5
Hammer mills	1.75
Ball mills	1.75
Pug mills	1.75
Mixers	1.5
Pipe mills	1.5
Beater mills	1.75
Separators	1.5
Roller presses	1.75

SELECTION OF THE COUPLING SIZE

E

The torque load of the coupling must be determined from the output of the driven machine and the coupling speed.

Rated coupling load $T_N = 9550 \times P_N / n_N$
(T_N in Nm; P_N in kW; n_N in rpm)

The rated coupling load obtained in this way must be multiplied by factors and compared with the rated coupling torque. An ideal but expensive method is to measure the torque characteristic on the coupling. For this, Flender offers special adapters fitted with torque measuring devices.

The rated coupling torque T_{KN} is the torque which can be transmitted by the coupling over an appropriate period of use if the load is applied to the coupling purely statically at room temperature.

Application factors are to express the deviation of the real coupling load from the "ideal" load condition.

Coupling load in continuous operation

The operating principles of the driving and driven machines are divided into categories and the application factor FB derived from these in accordance with DIN 3990-1.

Application factor for N-EUPEX, N-EUPEX-DS, RUPEX, N-BIPEX, ELPEX-B, N-ARPEX, ARPEX, ZAPEX and FLUDEX

Application factor FB				
	Torque characteristic of the driven machine			
Torque characteristic of the driving machine	uniform	uniform with moderate shock loads	non uniform	very rough
uniform	1.0	1.25	1.5	1.75
uniform with moderate shock loads	1.25	1.5	1.75	2.0
non uniform	1.5	1.75	2.0	2.5

Examples of torque characteristic of driving machines:

- uniform: Electric motors with soft starting, steam turbines
- uniform with moderate shock loads: Electric motors without soft starting, hydraulic motors, gas and water turbines
- non uniform: Internal-combustion engines

Examples of torque characteristic in driven machines:

- uniform: Generators, centrifugal pumps for light fluids
- uniform with moderate shock loads: Centrifugal pumps for viscous fluids, elevators, machine tool drives, centrifuges, extruders, blowers, crane drives
- non uniform: Excavators, kneaders, conveyor systems, presses, mills
- very rough: Crushers, excavators, shredders, iron/smelting machinery

Temperature factor FT											
			Temperature T_a on the coupling								
Coupling	Elastomer material	Low temperature °C	under -30 °C	-30 °C up to 50 °C	up to 60 °C	up to 70 °C	up to 80 °C	up to 90 °C	up to 100 °C	up to 110 °C	up to 120 °C
N-EUPEX	NBR	-30	–	1.0	1.0	1.0	1.0	–	–	–	–
N-EUPEX	NR	-50	1.1 [1]	1.0	–	–	–	–	–	–	–
N-EUPEX	HNBR	-10	–	1.0	1.0	1.0	1.0	1.25	1.25	–	–
N-EUPEX DS	NBR	-30	–	1.0	1.0	1.0	1.0	–	–	–	–
RUPEX	NBR	-30	–	1.0	1.0	1.0	1.0	–	–	–	–
RUPEX	NR	-50	1.1	1.0	–	–	–	–	–	–	–
RUPEX	HNBR	-10	–	1.0	1.0	1.0	1.0	1.25	1.25	–	–
N-BIPEX	TPU	-50	1.0	1.0	1.0	1.0	1.0	1.0	1.0	–	–
ELPEX	NR	-40	1.1	1.0	1.25	1.40	1.60	–	–	–	–
ELPEX-B	NR	-50	1.1	1.0	–	–	–	–	–	–	–
ELPEX-B	CR	-15	–	1.0	1.0	1.0	–	–	–	–	–
ELPEX-S SN, NN, WN	NR	-40	1.1	1.0	1.25	1.40	1.60	–	–	–	–
ELPEX-S NX	VMQ	-40	1.1	1.0	1.0	1.0	1.0	1.1	1.25	1.4	1.6

NR = natural rubber, natural-synthetic rubber mixture
NBR = nitril-butadiene-rubber (Perbunan)
HNBR = hydrated acrylonitrile butadiene rubber
CR = chloroprene rubber (FRAS fire-resistant and anti-static)
VMQ = silicone
TPU = polyurethane

[1] The N-EUPEX coupling is not suitable for shock loads when used at low temperatures.

Coupling size $T_{KN} \geqslant T_N \cdot FB \cdot FT$

In the case of ARPEX and ZAPEX coupling types, no temperature factor (FT = 1.0) need be taken into account.

Coupling load at maximum and overload conditions

The maximum torque is the highest load acting on the coupling in normal operation.
Maximum torques at a frequency of up to 25 times an hour are permitted and must be lower than the maximum coupling torque. Examples of maximum torque conditions are: Starting operations, stopping operations or usual operating conditions with maximum load.

$T_{Kmax} \geqslant T_{Max} \cdot FT$

Overload torques are maximum loads which occur only in combination with special, infrequent operating conditions. Examples of overload torque conditions are: Motor short circuit, emergency stop or blocking because of component breakage. Overload torques at a frequency of once a month are permitted and must be lower than the maximum overload torque of the coupling. The overload condition may last only a short while, i.e. fractions of a second.

$T_{KOL} \geqslant T_{OL} \cdot FT$

Coupling load due to dynamic torque load

Applying the frequency factor FF, the dynamic torque load must be lower than the coupling fatigue torque.

Dynamic torque load

$T_{KW} \geqslant T_W \cdot FF$

Frequency of the dynamic torque load
$f_{err} \leqslant 10$ Hz frequency factor FF = 1.0

Frequency of the dynamic torque load
$f_{err} > 10$ Hz frequency factor FF = $\sqrt{(f_{err}/10\ Hz)}$

For the ZAPEX and ARPEX series, the frequency factor is always FF = 1.0.

SELECTION OF THE COUPLING SIZE

E

Checking the maximum speed

For all load situations $n_{Kmax} \geqslant n_{max}$

Checking permitted shaft misalignment

For all load situations, the actual shaft misalignment must be less than the permitted shaft misalignment.

Checking bore diameter, mounting geometry and coupling design

The check must be made on the basis of the dimension tables. The maximum bore diameter applies to parallel keyways to DIN 6885. For other keyway geometries, the maximum bore diameter can be reduced.

On request, couplings with adapted geometry can be provided.

Coupling behavior under overload conditions

The ZAPEX, N-ARPEX, ARPEX, N-EUPEX, RUPEX and N-BIPEX coupling series can withstand overloads until the breakage of metal parts. These coupling series are designated as fail-safe.
The N-EUPEX DS, ELPEX-B, ELPEX-S and ELPEX coupling series throw overload. The elastomer element of these couplings is irreparably damaged without damage to metal parts when subjected to excessive overload.

These coupling series are designated as non-fail-safe. These types that fail can be fitted with a so-called fail-safe device. This additional component enables emergency operation, even after the rubber element of the coupling has been irreparably damaged.

Checking shaft-hub connection

The torques specified in the tables of power ratings data of the coupling series do not necessarily apply to the shaft-hub connection. Depending on the shaft-hub connection, proof of form stability is required. Flender recommends obtaining proof of form strength by using calculation methods in accordance with the current state of the art.

Shaft-hub connection	Suggestion for calculation method
Keyway connection to DIN 6885-1	DIN 6892
Shrink fit	DIN 7190
Spline to DIN 5480	
Bolted flange connection	VDI 2230
Flange connection with close-fitting bolts	

Fitting recommendations for the shaft-hub connection are given in the **Appendix**.

The coupling hub is frequently fitted flush with the shaft end face. If the shaft projects, the risk of collision with other coupling parts must be checked. If the shaft is set back, in addition to the load-bearing capacity of the shaft-hub connection, the correct positioning of the hub must be ensured as well. If the bearing hub length is insufficient, restorative forces may cause tilting movements and so wear to and impairment of the axial retention. Also, the position of the set screw to be positioned on sufficient shaft or parallel key material must be noted.

Checking low temperature and chemically aggressive environment

The minimum permitted coupling temperature is specified in the Temperature factor FT table. In the case of chemically aggressive environments, please consult the manufacturer.

FEATURES OF THE STANDARD TYPE

Couplings	Features of the standard type
All coupling series except ARPEX clamping hubs and FLUDEX with keyway to ASME B17.1	Bore tolerance H7
N-ARPEX and ARPEX clamping hubs	Bore tolerance H6
FLUDEX couplings with keyway to ASME B17.1	Hollow shafts: bore tolerance K7
	other parts: Bore tolerance M7
All coupling series with bore diameter - imperial	Parallel keyway to ASME B17.1
Bore diameter metric in the case of ZAPEX, N-ARPEX and ARPEX coupling series as well as coupling hubs with applied brake disks or brake drums of the N-EUPEX and RUPEX series	Parallel keyway to DIN 6885-1 keyway width P9
Bore diameter metric in the case of the N-EUPEX, RUPEX, N-BIPEX, ELPEX-S, ELPEX-B, ELPEX, FLUDEX coupling series	Parallel keyway to DIN 6885-1 keyway width JS9
All coupling series except FLUDEX	Axial locking by means of set screw
FLUDEX coupling series	Axial lock by means of set screw or end washer
All coupling series	Balancing in accordance with half parallel key standard
ZAPEX, N-ARPEX, ARPEX, N-EUPEX, RUPEX, N-BIPEX, ELPEX-S, ELPEX-B and ELPEX coupling series	Balancing quality G16
FLUDEX coupling series	Balancing quality G6.3
All series	Unpainted
All series	Preservation with cleaning emulsion
FLUDEX couplings	Fuse 140 °C

Configurator

The article number can be obtained with the help of the Configurator. The coupling can be selected in a product configurator and specified using selection menus.

The Configurator is available under **flender.com**.

The coupling can be selected via "Technical selection" (technical selection) or via "Direct selection" (via article-no.).

FLUID COUPLINGS FLUDEX SERIES

General	**13/2**
Benefits	13/2
Application	13/3
Design and configurations	13/3
Function	13/7
Technical specifications	13/9
Configuration	13/11
Mass moments of inertia	13/17
Technical data for type selection	13/19
FLUDEX coupling as an aid for starting the IEC motors	**13/20**
Speed *n* = 1500 rpm	13/20
Speed *n* = 3000 rpm	13/24
Type FAO	**13/28**
Type FAR	**13/30**
Type FAD	**13/32**
Type FAE	**13/33**
Type FAM	**13/34**
Type FADB	**13/35**
Type FADS SB	**13/36**
Type FADS HB	**13/37**
Oil filling quantities for FA series	**13/38**
Type FGO	**13/40**
Type FGD	**13/41**
Type FGE	**13/42**
Type FGM	**13/43**
Oil filling quantities for FG series	**13/44**
Type FVO	**13/46**
Type FVD	**13/47**
Type FVE	**13/48**
Type FVM	**13/49**
Oil filling quantities for FV series	**13/50**
Type FNO	**13/52**
Type FNA	**13/53**
Type FND	**13/54**
Type FNDB	**13/56**
Type FNDS SB	**13/58**
Type FNDS HB	**13/60**
Oil filling quantities for FN series	**13/62**
Spare and wear parts	**13/64**

FLUDEX
FLENDER

GENERAL

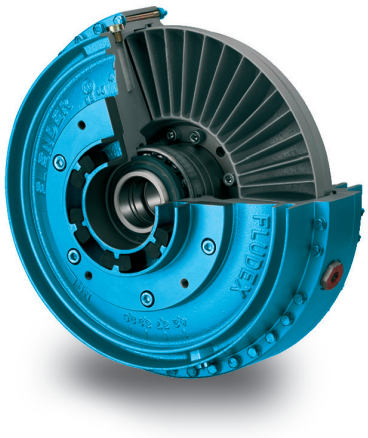

Coupling suitable for use in potentially explosive atmospheres.
Complies with the current ATEX Directive for:

II 2G Ex h IIB T3 Gb X

II 2D Ex h IIIC T160°C Db X

I M2 Ex h Mb X

FLUDEX couplings marked with Ex are constructed with fusible safety plugs 110 °C.

Benefits

FLUDEX couplings are hydrodynamic fluid couplings which operate on the Föttinger principle. The coupling parts on the input and output sides are not mechanically connected to each other. Output is transmitted via the oil filling which rotates in the coupling and is conducted over radially arranged blades.

FLUDEX couplings limit starting and maximum torque in the drive train and, through the property of rotational slip, serve as an aid to starting the motor, as overload protection in the event of fault and for isolating torsional vibration.

When large masses are started up, the drive train is accelerated only at the torque determined by the coupling characteristic. The starting operation is spread over time, the driven machine started softly and smoothly.

In the case of special operating conditions, such as overload or blocking of the driven machine, the FLUDEX coupling limits the maximum torque load and prevents the inert effect of the rotating motor mass on the drive train.
The coupling then acts as a load-holding safety clutch until the drive is shut off by the motor control or coupling monitoring system.

The FLUDEX coupling further acts as a means of decoupling during torsional vibration excitation. Torsional vibration excitation with a frequency of > 5 Hz is virtually absorbed by the coupling.

To compensate for shaft misalignment, the FLUDEX coupling is combined with a displacement coupling e.g. of the N-EUPEX type.

All FLUDEX couplings are designed with radial unset blades and are therefore suitable for rotation in both directions and reversing operation. They can be fitted horizontally, at an angle or vertically. In the case of FLUDEX couplings with a delay chamber it must be ensured, when fitting at an angle or vertically, that the delay chamber is below the working chamber.

Application

FLUDEX couplings are used in drives for conveyor systems such as belt conveyors, bucket elevators and chain conveyors. In heavy industry FLUDEX couplings are used for applications such as blade wheel drives, crushers, roller presses, mixers, large ventilators, boiler feed pumps, large compressors, centrifuges and auxiliary drives for mills.

Further applications are, for example, pump drives, PTO generator drives, wind power systems and door and gate drives.

In drives with diesel engines, FLUDEX couplings are used on driven machines with a high mass moment of inertia.

Design and configurations

FLUDEX couplings are constructed of just a few, robust components. Internal components include the hollow shaft or solid shaft (106), to which the blade wheel (105) is connected. The outer housing comprises the cover (102) and the blade wheel housing (101). The joint is constructed as a bolted flange joint and sealed with an O ring. The outer housing and the shaft or hollow shaft have double bearing support and are sealed off to the outside with radial shaft seals. The coupling is provided with two filler plugs (153) with integral overflow protection and with one or two fusible safety plugs (103) in the coupling housing for protection against overheating. The fusible safety plug or a screw plug fitted in the same position also serves as a fluid drain plug and with the aid of a scale marking on the housing can be used as a level indicator.

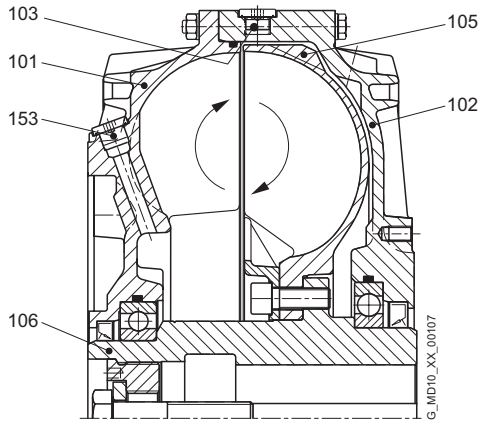

Materials

- Blade wheel and housing:
  Cast aluminum AlSi10Mg or AlSi9Mg
- Shaft and hollow shaft:
  Steel with a yield point higher than 400 N/mm^2
- Static seals and radial shaft seals:
  Perbunan NBR or Viton FPM
- Add-on parts:
  Grey cast iron EN-GJL-250, spheroidal graphite cast iron EN-GJS-400 or steel

Fusible safety plugs

If a FLUDEX coupling is operated with an impermissibly high slip for a prolonged period, the oil filling and the coupling housing will overheat. Fusible safety plugs which release the oil filling into the environment upon reaching a preset temperature are therefore fitted in each coupling housing. These protect the coupling from irreparable damage through overheating or overpressure and disconnect the drive motor from the driven machine.

GENERAL

Thermal equipment

Equipment	Suitability for coupling continuous operating temperatures	Fusible safety plug	Sealing materials
	up to 85 °C	110 °C	NBR
			FPM
Standard	up to 85 °C	140 °C	NBR
			FPM
	up to 110 °C	160 °C	FPM
ATEX	up to 85 °C	110 °C ex	NBR
			FPM
With thermal switch [1]	up to 85 °C	140 °C + thermal switch 110 °C	NBR
			FPM
	up to 110 °C	160 °C + thermal switch 140 °C	FPM
With transmitter [1]	up to 85 °C	160 °C + EOC transmitter (125 °C)	NBR
	up to 110 °C		FPM

Thermal switching equipment

By adding thermal switching equipment leakage and loss of the hydraulic fluid as well as a risk to and contamination of the environment in the event that the coupling overheats can be avoided.

The thermal switching equipment does not work if a machine side is blocked and the coupling housing is connected to this side. If the coupling is stationary, the switching pin cannot actuate the switching equipment.

The thermal switching equipment comprises the thermal switch and the switchgear.

The switchgear comprises a limit switch with a make-and-break contact and a swiveling cam. Limit switch and cam are mounted on a common base plate. The thermal switch is screwed into the housing in place of a screw plug. The fusible safety plug (with a higher response temperature) remains in the coupling for additional safety.

If the set temperature is exceeded, the switching pin is released from the fusible element, emerges 10 mm from the housing and actuates the switchgear while the coupling is rotating. The switchgear can cut out the drive motor and/or trigger an optical or acoustic alarm signal.
The housing of the coupling remains closed and no operating fluid will escape.

Continuous operating temperature	Thermal switch	Fusible safety plug
≤ 85 °C	110 °C	140 °C
> 85 ° ... 110 °C	140 °C	160 °C

[1] Not available for size 222.

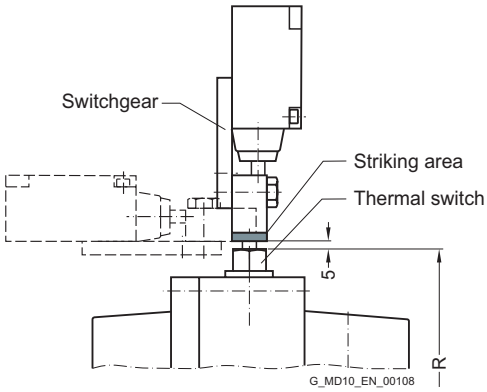

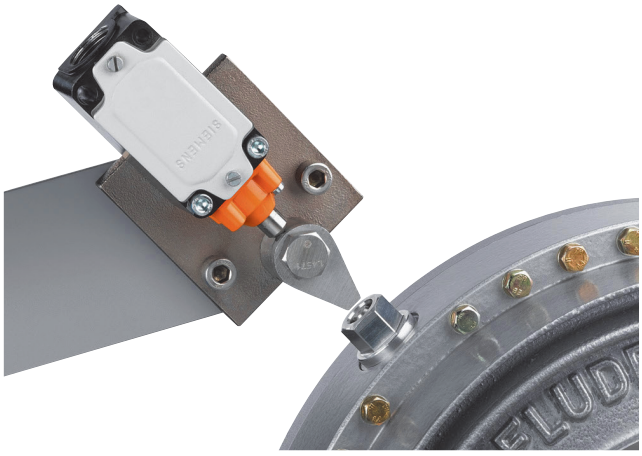

	Coupling size												
	297	342	370	395	425	450	490	516	565	590	655	755	887
Perm. speed in rpm	2500	2240	2100	2000	1900	1800	1650	1600	1500	1450	1250	1100	1000
Radius of travel R in mm	188	215	226	239	251	271	292	307	330	346	383	435	507

From coupling size 297, the thermal switching equipment can be used up to a peripheral speed of 50 m/s. At higher speeds, an EOC system should be provided.

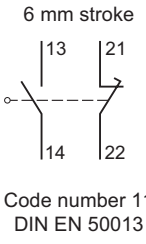

Snap-action switching contact

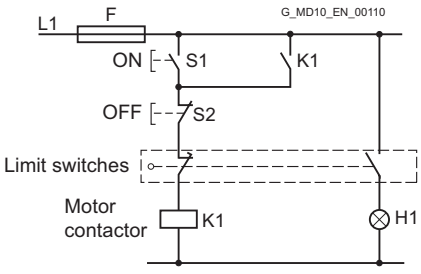

Wiring proposition

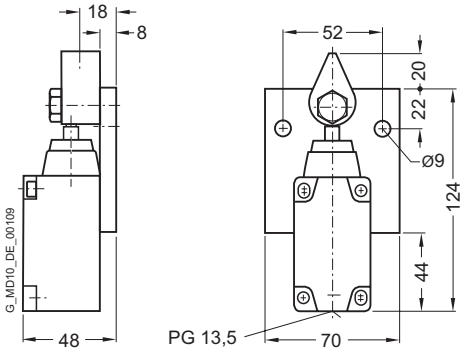

Switchgear: FFA:000000652020

GENERAL

EOC system

On the EOC system the temperature-dependent magnitude of the magnetic field of the EOC transmitter is measured and used for a switching pulse. The transmitter signal is transmitted via the fixed sensor to the evaluation instrument and there compared with the set value. If the signal does not exceed the minimum value or no signal is received, the relay of the evaluation instrument switches over. This can cause a malfunction message to be sent and the motor cut out. The coupling housing remains closed.

The fusible safety plug with a higher response temperature remains in the coupling for additional safety.
The response temperature of the EOC system is 125 °C.

Components of the EOC system

Component	Article No.
EOC transmitter with seal	FFA:000001194899
EOC sensor	FFA:000000361460
Evaluation instrument EWD	FFA:000001205294

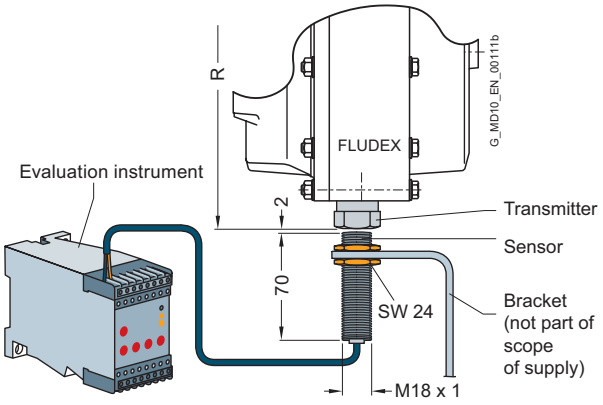

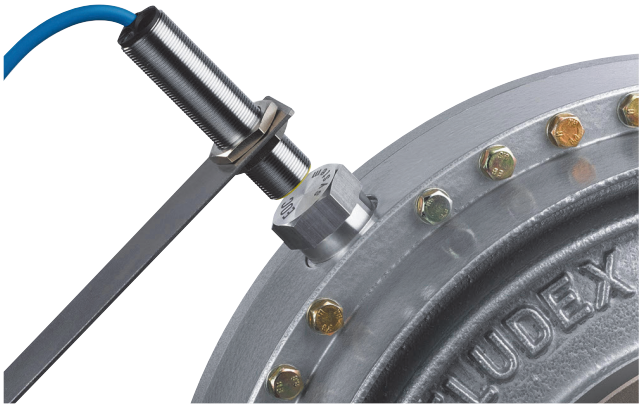

	Coupling size												
	297	342	370	395	425	450	490	516	565	590	655	755	887
Radius of travel R to the transmitter in mm	188	215	226	239	251	271	292	307	330	346	383	435	507

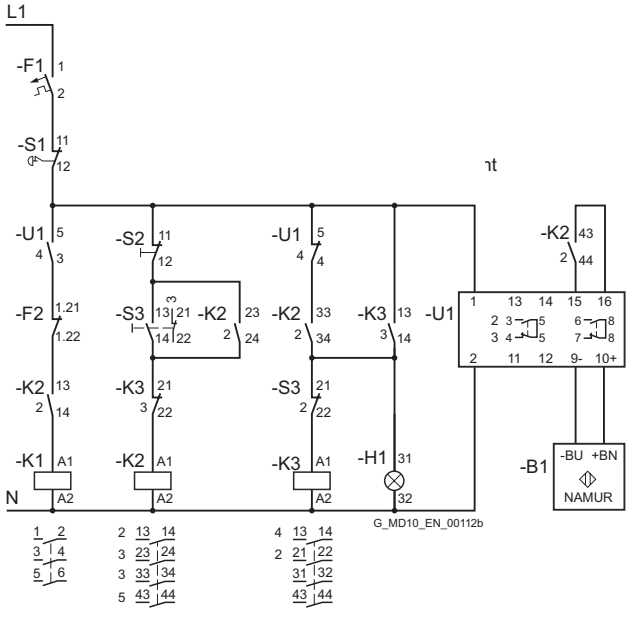

Wiring proposition

B1 Sensor
F1 Fuse
F2 Motor protection switch
H1 Malfunction
K1 Motor protection
K2 Contactor relay
K3 Contactor relay
S1 Emergency stop
S2 Motor Off
S3 Motor On
U1 Evaluation instrument

Function

Föttinger principle

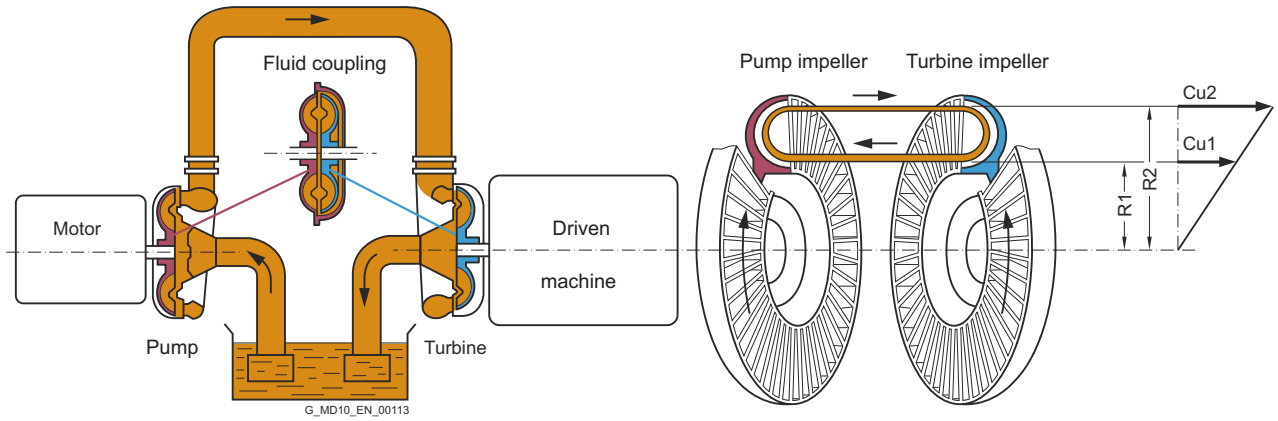

Two opposing, radially bladed impellers are housed in a leakproof housing. The impellers are not mechanically connected to each other. Because of the axially parallel arranged blades, the torque is transmitted independently of the direction of rotation and solely by the oil filling.

Hydrodynamic couplings have the characteristic properties of fluid flow engines. The transmissible torque depends on the density and quantity of the operating fluid and increases as the square of the drive speed and the fifth power of the profile diameter denoting the coupling size. In the driven pump impeller, mechanical energy is converted into kinetic flow energy of the operating fluid. In the turbine impeller, which is connected to the output side, flow energy is converted back to mechanical energy.

To generate the operating fluid circulation necessary for torque transmission, a difference in speed is necessary between the pump and turbine impellers. A centrifugal force pressure field is set up that is greater in the faster rotating pump impeller than in the turbine impeller.
The difference in speed, usually termed "slip", at the continuous operating point of the coupling is between 2 % and 6 %, depending on application and coupling size. Immediately after drive motor start-up slip is 100 %, i.e. the pump impeller is driven at the speed of the motor, but the turbine impeller remains stationary.

Slip multiplied by the transmitted power represents the power loss of the coupling, which is converted into heat inside the oil filling. The amount of heat generated must be released into the environment via the coupling housing to prevent an impermissible temperature rise. The rated coupling output is mainly determined by the power loss which can be dissipated at a still acceptable operating temperature or a reasonable set slip limit. This distinguishes the FLUDEX coupling from all positively acting coupling assembly options for which the rated coupling torque is the defining characteristic.

Depending on the FLUDEX coupling series, drive is via the inner rotor (shaft/hollow shaft with rigidly connected blade wheel) or via the bladed housing impeller (blade wheel housing). The driving impeller is the pump impeller, and the driven impeller is the turbine impeller.

A low-viscosity mineral oil VG 22/VG 32, which also serves to lubricate the bearings, is used as fluid. In special types water, a water emulsion or low-flammability fluid may be used as a non-combustible fluid.

GENERAL

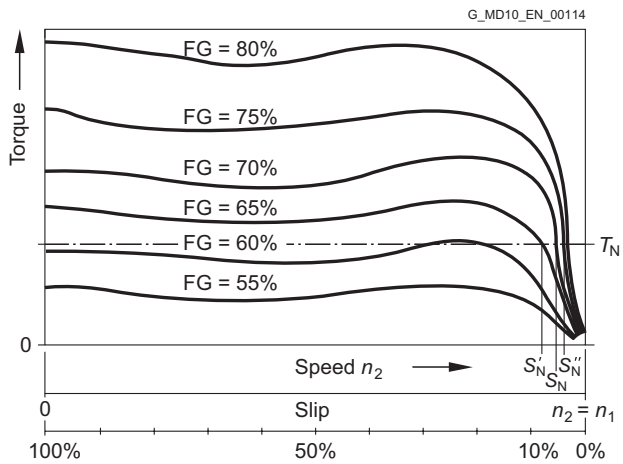

Slip-torque characteristics for different filling levels FG

The torque characteristic depends on the oil filling quantity FG in the coupling. This enables the transmissible torque on starting up to be set via the filling level. With a higher filling level the starting torque increases, while the operating slip and thus the coupling temperature rise decreases.

Conversely, with a lower filling level the starting torque decreases, the coupling becomes softer, while slip and coupling temperature rise.

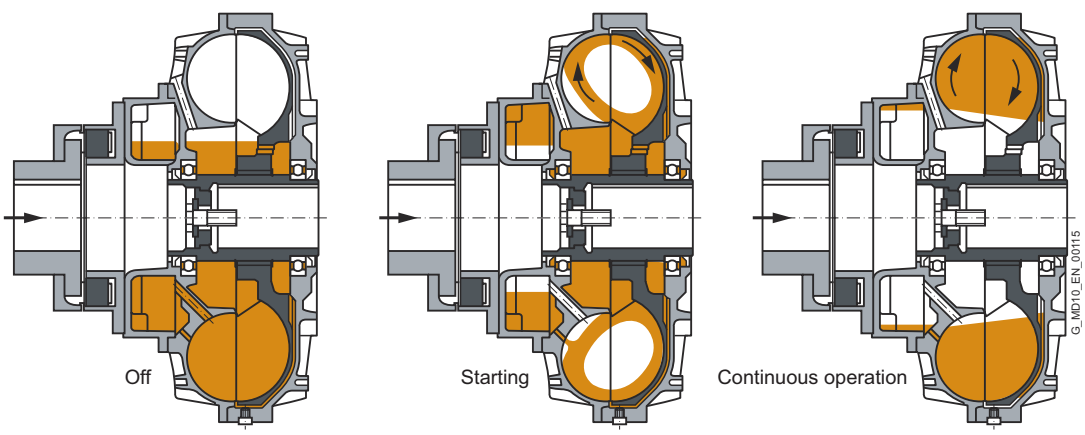

Operation of the delay chamber

Starting torque can be reduced without increasing continuous operating slip by using a type of coupling with a delay chamber. On these couplings part of the oil filling is initially stored inactively in the delay chamber. The starting torque is considerably reduced because of the thus reduced starting filling in the working chamber of the coupling. The filling in the delay chamber runs very slowly, mostly only at the finish of the starting operation, from the delay chamber into the working chamber, causing the active filling in it to rise gradually and the continuous operating slip to reach a value corresponding to the whole filling.

Technical specifications

Balancing FLUDEX couplings

In deviation from the balancing specifications in **Chapter E**, all FLUDEX couplings complying with DIN ISO 21940 are balanced to balancing quality G6.3 for 1800 rpm. For operating speeds higher than 1800 rpm micro-balancing, based on operating speed, can be requested.

Balancing is a two-level balancing with the specified oil quantity or a 75 % filling.

FLUDEX couplings are balanced in accordance with the half parallel key standard. Other balancing standards must be specified in the order.

Add-on couplings are subject to the standards as set out in **Chapter E**.

Oil filling

FLUDEX couplings can be delivered with or without oil filling.

- Delivery without oil filling
- Delivery with oil filling
- Delivery without oil filling but with oil filling quantity specification in liters

Hollow shafts of the FA, FG and FV series

Variant of FLUDEX hollow shafts only with finished bore.

Operating temperature range of FLUDEX couplings

FLUDEX couplings are suitable for ambient temperatures of between -40 °C and +40 °C.

For use at temperatures below -15 °C, FLUDEX couplings are exclusively delivered with NBR seals (Perbunan).

For use at temperatures below -20 °C, FLUDEX couplings are generally delivered without oil filling.

To select the operating oil for low temperatures, ensure that the pour point of the oil is sufficiently low and that it is compatible with the sealing elements.

The temperature limits of the N-EUPEX add-on coupling are shown in part 7 of this cataloge.

If other displacement couplings are combined with a FLUDEX coupling, their respective temperature limits must be taken into account.

GENERAL

Operating conditions for FLUDEX couplings in potentially explosive atmospheres

The coupling with fusible safety plugs with identity marking Ⓔx T3 is suitable for the operating conditions set out in the ATEX Directive 2014/34/EU:

Equipment group II (above-ground applications)
Temperature class T3 of categories 2 and 3 for environments where there are potentially explosive gas, vapors, mist and air mixtures and for environments where dust can form potentially explosive atmospheres.

Equipment group I (below-ground applications) of category M2

Ⓔx If used in potentially explosive environments under ground, aluminum couplings must be provided with a robust enclo-sure to preclude the risk of ignition caused by e.g. friction, impact or friction sparks. The deposit of heavy-metal oxides (rust) on the coupling housing must be prevented by the enclosure or other suitable means.

Ⓔx FLUDEX couplings can be delivered with fitted brake disk or V-belt pulley.
Designing the belt drive or the brake disk to conform with the guidelines is the responsibility of the subassembly supplier. It should be noted that there is a risk from, amongst other things, electrostatic charges and hot surfaces.
Under BGR 132 (regulations of German Institute for Occupational Safety) the use of V-belts in conjunction with IIC gases is not permitted.

Axial retention

Axial retention is provided by a set screw or end washer with a retaining screw for shaft ends to DIN 748/1 long with a centering thread to DIN 332/2.

Bore and keyway width tolerances are specified in **Chapter A**.

Weights specified in the dimension order tables apply to maximum bore diameters without oil filling.

Configuration

Selection of FLUDEX coupling

In accordance with the requirements catalog various series, sizes and types of FLUDEX coupling are available. The FLUDEX coupling series is characterized by various flow chamber configurations, fitted delay chambers or fittings in the flow chamber. The types are determined by the design of the add-on coupling.

This results in different starting factors and characteristics which can be used for the most varied applications. The size is specified by stating the flow outside diameter.

When selecting, the series required for the application, taking into account the starting factor and the characteristic, must be selected.

Selection of FLUDEX series

Series	Description
FA../FG..	Basic coupling without delay chamber
FV..	Coupling with delay chamber
FN..	Coupling with large delay chamber

FLUDEX couplings, which are to be used solely as an aid to starting the motor under no special conditions, can be selected according to the assignment tables from **Page 13/20** (for n = 1500 min^{-1}) or from **Page 13/24** (for n = 3000 min^{-1}).

If special requirements, based on the operating method of the prime mover or driven machine, are made of the coupling or the coupling is to be used in extreme environmental conditions, please give specific details in the enquiry or order. The form "Technical specifications for the selection of type and size" on **Page 13/19** can be used for this purpose.

Start-up characteristics during the starting process

Depending on the series selected, different starting characteristics arise during starting.

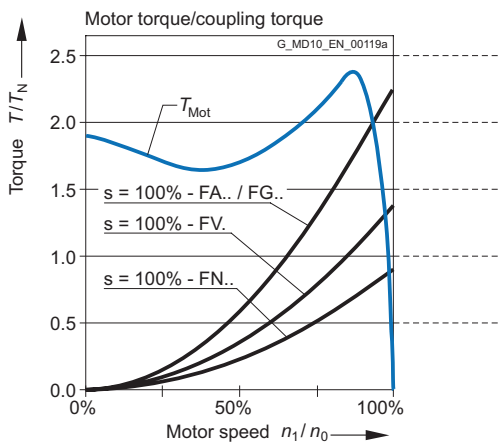

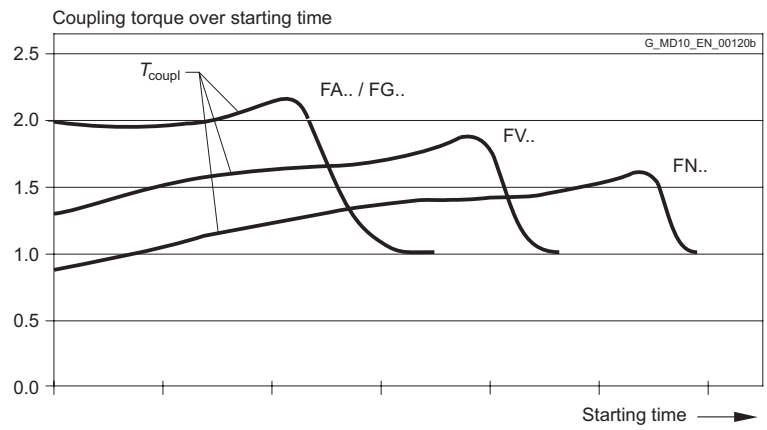

GENERAL

FA series – drive via the hollow shaft (impeller drive)

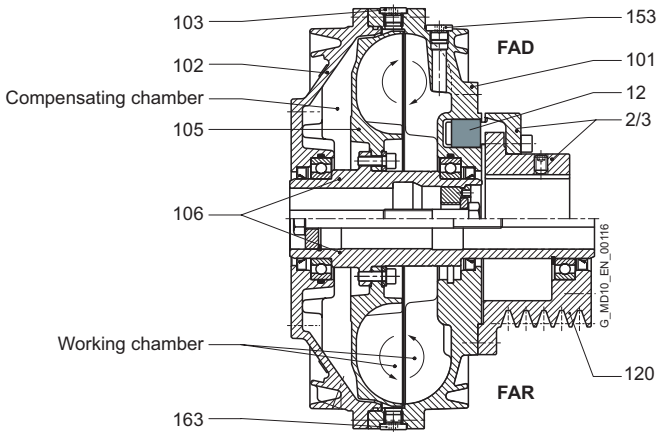

2/3	Part 2/3 of the flexible coupling
12	Flexible elements
101	Blade wheel (outer wheel)
102	Cover
103	Fusible safety plug
105	Blade wheel (inner wheel)
106	Hollow shaft
120	V-belt pulley
153	Filler plug
163	Screw plug (oil drain)

FLUDEX FA series couplings are basic couplings (without delay chamber) which are driven via the hollow shaft (106) with attached blade wheel (105). This enables the advantages of the compensating chamber and the working chamber to be used to best effect. Combinations with brake drums/disks and pulleys can also be easily achieved. When the coupling is started, part of the oil filling in the area of greatest slip is forced into the radially inner chambers and the compensating chamber by the strong rotational flow. This causes the effective oil filling in the working chamber to be reduced and the desired torque limitation (approx. twice TN) to be achieved during starting. By means of additional fittings the coupling torque at the start of the starting operation can be limited to approx.1.5 times the rated value. During run-up to speed the compensating chamber again empties into the working chamber, and this helps to reduce slip.

FG and FV series – drive via the housing

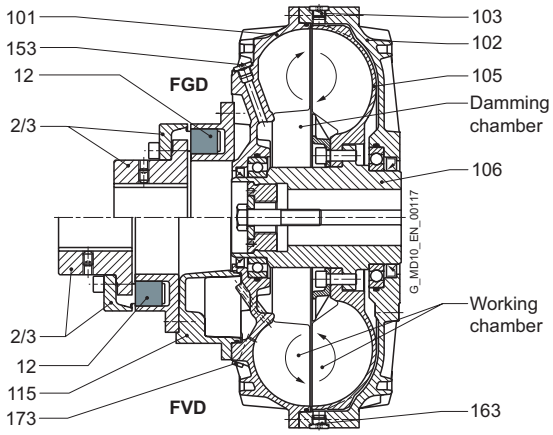

2/3	Part 2/3 of the flexible coupling
12	Flexible elements
101	Blade wheel (outer wheel)
102	Cover
103	Fusible safety plug
105	Blade wheel (inner wheel)
106	Hollow shaft
115	Delay chamber
153	Filler plug
163	Screw plug (oil drain)
173	Oil drain plug - delay chamber

FLUDEX FG and FV series couplings are designed for drive via the coupling housing. In the FV series (coupling with delay chamber), the motor drives the coupling housing, comprising a blade wheel (101) and a cover (102), via the flexible N-EUPEX coupling (part 2/3) and the delay chamber (115). The rotational flow of the coupling filling drives the blade wheel (105) and the hollow shaft (106) on the output side, which is mounted on the gear unit or driven machine shaft. In the FG series (basic coupling), there is no delay chamber, and the flexible coupling is directly flange-mounted on the blade wheel.

When the coupling is started up, part of the oil filling is forced into the damming chamber. This enables the desired torque limitation (approx. twice T_N) to be achieved during motor starting. In the FV series the delay chamber also receives part of the oil filling in accordance with the fluid level when the coupling is stationary. During starting the effective oil filling in the working chamber is reduced by the amount of fluid in the delay chamber, thus considerably reducing the starting torque (approx. 1.5 times T_N).

From the delay chamber located on the drive side, the oil is fed back time-dependently to the working chamber via small holes and the coupling torque is raised, even if the output is blocked.

This replenishing function enables a drive to be soft-started with a very low starting torque and with an almost load-free motor. At the same time, however, increased load torques can be overcome by the torque increase in the coupling.

The property of the coupling with delay chamber can be used advantageously, for example, to soft-start empty, partly loaded and fully loaded conveyor belts.

FG series couplings are used for normal starting torque limitation, as a starting clutch for isolating vibration and for overload limitation in the event of drive blockage.

GENERAL

FN series – drive via the housing

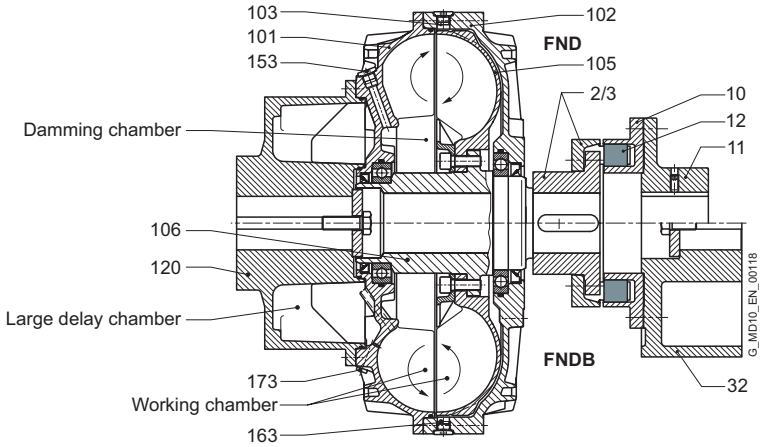

2/3	Part 2/3 of the flexible coupling
10	Part 10 of the flexible coupling
12	Flexible elements
11	Part 11
32	Brake drum
101	Blade wheel (outer wheel)
102	Cover
103	Fusible safety plug
105	Blade wheel (inner wheel)
106	Shaft
120	Hub carrier (large delay chamber)
153	Filler plug
173	Oil locking screw - delay chamber
163	Screw plug (oil drain)

FLUDEX FN series couplings have a larger delay chamber than the FV series. The delay chamber is designed as a hub carrier (120) and is mounted on the motor shaft. The hub carrier is flange-fitted to the housing (101, 102) of the FLUDEX coupling. Output is via the blade wheel (105) and the shaft (106) to the flexible N-EUPEX coupling connecting to the gear unit or driven machine. With types FND, FNDB and FNDS the coupling can be dismounted radially without moving the coupled machines.

Because of the larger delay chamber, FN couplings enable even softer starting than FV couplings. Torque limitation during motor starting is approx. 1.3 times T_N. A further advantage of types FNDB and FNDS is the favorable weight distribution.

The normally stronger motor shaft bears the weight of the hub carrier (cast version) and the main coupling. The gear unit shaft carries only the brake drum or disk and the output-side part of the flexible coupling. At the same time, the principle of the drive-side delay chamber with the capacity for increasing torque time-dependently is retained. FN couplings have the same fields of application as FV couplings. However, they offer special advantages in the brake disk design because of the weight distribution.

Selection of FLUDEX type

Listed in the catalog are FLUDEX couplings with pulley, brake drum, brake disk and flexible N-EUPEX coupling.

Further types, e.g. in combination with a torsionally rigid steel membrane coupling of the ARPEX series or a highly flexible coupling of the ELPEX or ELPEX-S series, are available.

Series	Description	Type	Add-on coupling	Characteristic feature
FA	• without delay chamber • impeller-driven • Starting torque: $T_{max} = 2{,}0 \cdot T_{eff}$ • Starting aid for standard motors and torsional vibration isolation	FA**O**	**Without**	• Basic coupling with connecting flange
		FA**R**	Without	• with attached pulley
		FA**D**	N-EUPEX **D**	• enables change of flexible elements without axial displacement of the machine
		FA**E**	N-EUPEX **E**	• enables larger bores on the output side
		FA**M**	N-EUPEX **M**	• enables a short fitting length
		FA**DB**	N-EUPEX **D**	• with brake drum
		FA**DS SB**	N-EUPEX **D**	• with brake disk for stopping brakes • enables change of flexible elements without axial displacement of the machine
		FA**DS HB**	N-EUPEX **D**	• with brake disk for blocking brakes • enables change of flexible elements without axial displacement of the machine
FG	• without delay chamber • Housing-driven • Starting torque: $T_{max} = 2.0 \cdot T_{eff}$ • Starting aid for standard motors, for torsional vibration isolation and for overload limitation in the event of drive blockage.	FG**O**	**Without**	• Basic coupling with connecting flange
		FG**D**	N-EUPEX **D**	• enables change of flexible elements without axial displacement of the machine
		FG**E**	N-EUPEX **E**	• enables larger bores on the output side
		FG**M**	N-EUPEX **M**	• enables a short fitting length
FV	• with delay chamber • Housing-driven • Starting torque: $T_{max} = 1.5 \cdot T_{eff}$ • Starting aid for motors and soft-starting of conveyor equipment	FV**O**	**Without**	• Coupling with connecting flange
		FV**D**	N-EUPEX **D**	• enables change of flexible elements without axial displacement of the machine
		FV**E**	N-EUPEX **E**	• enables larger bores on the output side
		FV**M**	N-EUPEX **M**	• enables a short fitting length
FN	• with large delay chamber • Housing drive via hub carrier • Starting torque: $T_{max} = 1.3 \cdot T_{eff}$ • Starting aid for motors with very unfavorable characteristic and soft-starting of empty and full conveying equipment • favorable weight distribution on brake-drum variant	FN**O**	**Without**	• Coupling with connecting shaft
		FN**A**	N-EUPEX **A**	• enables a short fitting length • enables change of flexible elements without axial displacement of the machine
		FN**D**	N-EUPEX **D**	• enables change of flexible elements without axial displacement of the machine • enables fitting and dismounting of the coupling without displacement of the coupled machine
		FN**DB**	N-EUPEX **D**	• with brake drum • enables change of flexible elements without axial displacement of the machine • enables fitting and dismounting of the coupling without displacement of the coupled machine
		FN**DS SB**	N-EUPEX **D**	• with brake disk for stopping brakes • enables change of flexible elements without axial displacement of the machine • enables fitting and dismounting of the coupling without displacement of the coupled machine
		FN**DS HB**	N-EUPEX **D**	• with brake disk for blocking brakes • enables change of flexible elements without axial displacement of the machine • enables fitting and dismounting of the coupling without displacement of the coupled machine

The maximum shaft misalignments permissible for an N-EUPEX add-on coupling are shown in **catalog FLE 10.2**. For greater shaft misalignments FLUDEX couplings can be combined with cardan shafts or other displacement couplings.

FLUDEX couplings designed specifically for operation with water/water emulsion are available for use in mining applications.

GENERAL

Selection of FLUDEX size

The FLUDEX size is determined by the output to be transmitted in comparison with the rated outputs listed in the following tables. No application factors or additional safety factors need be taken into consideration.
The rated outputs stated in the tables normally require the maximum permissible filling (80 % to 85 %) of the coupling and because of operating slip, lead to the coupling heating up by approx. 50 °C relative to the ambient (cooling air) temperature. With lower outputs, coupling heating will be proportionately lower.

If for continuous operation of the coupling an absolute temperature (ambient temperature + coupling heating) of >85 °C is expected, the coupling must be fitted with FPM seals and 160 °C fusible safety plugs.

When selecting the size of a FLUDEX coupling in ATEX design or for operation with water/water emulsion, please note that these versions are normally designed with fusible safety plugs 110 °C and the maximum permitted coupling temperature must be limited to 85 °C.

FA series

Speed in rpm 600	740	890	980	1180	1350	1470	1600	1770	2000	2300	2600	2950	3550	FLUDEX size
Rated output P_N in kW														
		1.2	1.6	2.8	4.2	5.5	6.9	8.7	11.7	15	19	24	33	**222**
1.2	2.3	4	5.5	9	14	18.5	23	29	37	48	60	70	90	**297**
2.6	4.8	8.7	11.5	18	27	34	40	51	65	82	97	120	145	**342**
5.7	10	16	21	36	49	61	74	87	105	135	165	180		**395**
11	21	32	41	65	90	110	127	155	190	230	290	370		**450**
19	36	60	75	115	154	190	215	260	310	395				**516**
37	69	109	134	200	260	320	360	435	540					**590**

FG, FV and FN series

Speed in rpm 600	740	890	980	1180	1350	1470	1600	1770	2000	2300	2600	2950	3550	FLUDEX size
Rated output P_N in kW														
4	7.5	12	16	26	38	48	61	85	110	140	170	220	290	**370**
7.5	15	23	30	48	70	90	115	140	175	220	280	340		**425**
15	30	45	58	95	140	180	210	245	300	380	480			**490**
28	55	85	110	180	255	300	350	420	525	660				**565**
55	110	170	220	350	450	520	600	730	900					**655**
110	210	330	440	600	760	870	1010	1220						**755**
240	440	700	810	1130	1440	1660								**887**
480	880	1400	1600	2000	2350	2500								**887D**[1]

[1] D = Multi-pass version on request.

Mass moments of inertia

FA series

FLUDEX size	Series	Types							Oil filling quantity
	FA J_I kgm²	FAO J_A kgm²	FAD J_A kgm²	FAE J_A kgm²	FAM J_A kgm²	FADB J_A kgm²	FADS SB J_A kgm²	FADS HB J_A kgm²	max. l
222	0.014	0.056	0.061	0.061	0.06	0.084	0.287	0.109	1.55
297	0.04	0.173	0.193	0.193	0.193	0.226	0.673	0.246	3.7
342	0.092	0.314	0.356	0.352	0.353	0.469	1.002	0.42	6.6
395	0.203	0.66	0.745	0.73	–	1.03	1.814	1.15	9.5
450	0.404	1.087	1.217	1.217	–	1.497	3.611	1.818	13.4
516	0.896	2.109	2.439	–	–	3.359	5.969	3.238	22.7
590	1.295	3.455	3.785	–	–	6.605	7.315	4.584	33

FAR series

FLUDEX size	J_I kgm²	J_A kgm²			Oil filling quantity max. l
222	0.014	2 · SPZ 100	3 · SPZ 160		1.55
		0.062	0.071		
297	0.107	5 · SPZ 150	4 · SPA 190	5 · SPA 224	3.7
		0.202	0.235	0.273	
342	0.095	5 · SPA 180			6.6
		0.386			
395	5 · SPB = 0,214	5 · SPB 224	7 · SPB 236	7 · SPB 280	9.5
	7 · SPB = 0,210	0.84	0.96	1.144	
450	0.426	8 · SPB 250			13.4
		1.467			
516	0.946	10 · SPB 315			22.7
		3.209			
590	1.375	12 · SPC 315			33
		4.955			

FG/FV series

FLUDEX size	Series		Types								Oil filling quantity	
	FG J_I kgm²	FV J_I kgm²	FGO J_A kgm²	FVO J_A kgm²	FGD J_A kgm²	FVD J_A kgm²	FGE J_A kgm²	FVE J_A kgm²	FGM J_A kgm²	FVM J_A kgm²	FG max. l	FV max. l
370	0.191	0.191	0.519	0.551	0.571	0.603	0.571	0.603	0.571	0.603	7.2	8
425	0.342	0.342	0.819	0.876	0.989	1.046	0.974	1.031	0.963	1.02	11	12
490	0.723	0.723	1.992	2.11	2.312	2.43	2.272	2.39	2.264	2.382	17	18.5
565	1.269	1.269	3.216	3.441	3.696	3.921	3.636	3.861	3.616	3.841	25.5	28
655	2.567	2.567	7.287	7.757	8.687	9.157	–	–	–	–	40	44
755	4.856	4.856	12.575	13.291	14.775	15.491	–	–	–	–	59	65
887	11.817	11.817	26.832	28.212	30.102	31.482	–	–	–	–	98	107

Note

- Mass moments of inertia *J* (including the power-transmitting oil filling components) apply to maximum bores

J_I Mass moment of inertia of the inner rotor (hollow shaft (106) + blade wheel (105)) in kgm²

J_A Mass moment of inertia of the outer housing (shell (101) + cover (102)) + any parts of the add-on coupling connected to them) in kgm²

GENERAL

FN series

FLUDEX size	Hub carrier part	Series FN J_A kgm²	Types FNO J_I kgm²	FNA J_I kgm²	FND J_I kgm²	FNDS SB J_I kgm²	FNDS HB J_I kgm²	Weights Y mm	F_Y N	Oil filling quantity max. l
370	Standard	0.657	0.237	0.281	0.32	1.18	0.386	197	685	8.2
	Long	0.647						227		
425	Standard	1.107	0.343	0.47	0.491	1.841	0.659	224	970	12.5
	Long	1.102						254		
490	Standard	2.48	0.737	0.954	0.999	3.009	1.285	235	1450	19
	Long	2.474						265		
565	Standard	4.175	1.364	1.715	1.835	5.075	2.081	278	2050	29
	Long	4.251						318		
655	Standard	9.319	2.567	3.587	3.777	6.777	4.701	330	3100	45
	Long	9.523						370		
755	Standard	15.616	4.91	6.878	7.198	12.078	9.689	352	4300	67
	Long	15.95						392		
887	Standard	33.662	11.832	15.132	16.632	24.03	20.428	406	7250	110
	Long	34.462						456		

Type FNDB

FLUDEX size	Hub carrier part	Brake drum ØDBT · BBT	J_A kgm²	J_I kgm²	Weights Y mm	F_Y N	Oil filling quantity max. l
370	Standard	Ø315 · 118	0.657	0.64	197	685	8.2
		Ø400 · 150		1.341			
	Long	Ø315 · 118	0.647	0.64	227		
		Ø400 · 150		1.341			
425	Standard	Ø315 · 118	1.107	0.811	224	970	12.5
		Ø400 · 150		1.492			
	Long	Ø315 · 118	1.102	0.811	254		
		Ø400 · 150		1.492			
490	Standard	Ø400 · 150	2.48	1.994	235	1450	19
		Ø500 · 190		4.009			
	Long	Ø400 · 150	2.474	1.994	265		
		Ø500 · 190		4.009			
565	Standard	Ø400 · 150	4.175	2.835	278	2050	29
		Ø500 · 190		4.775			
	Long	Ø400 · 150	4.251	2.835	318		
		Ø500 · 190		4.775			
655	Standard	Ø500 · 190	9.319	6.677	330	3100	45
		Ø630 · 236		11.577			
	Long	Ø500 · 190	9.523	6.677	370		
		Ø630 · 236		11.577			
755	Standard	Ø630 · 236	15.616	15.178	352	4300	67
	Long		15.95		392		
887	Standard	Ø710 · 265	33.662	30.832	406	7250	110
	Long		34.462		456		

Note

- Mass moments of inertia J (including the power-transmitting oil filling components) apply to maximum bores

J_I Mass moment of inertia of the inner rotor (shaft (106) + blade wheel (105)) + any parts of the add-on coupling connected to them in kgm²

J_A Mass moment of inertia of the outer housing (shell (101) + cover (102)) + hub carrier (120) in kgm²

Y Centroidal distance of the drive-side coupling masses, measured from the hub end face of the hub carrier.

F_Y Effective weight in mass center including maximum oil filling quantity

Technical data for type selection

Please complete as far as possible and return to your Flender Sales Office.

1. Intended use of coupling

☐ As starting aid ☐ For overload protection ☐ For torsional vibration isolation

2. Data for prime mover

2.1 ☐ Electric motor ☐ Characteristic enclosed

Power rating P_1 = ... kW at speed n_1 = ... rpm

Starting: ☐ Direct ☐ Star delta ☐ Other: .....

Motor shaft: Ø ..... · Length ..... mm

2.2 ☐ Internal-combustion engine Number of cylinders:: .....

Planned operating range max. power rating: ..... kW at ..... rpm

min. power rating: ..... kW at ..... rpm

☐ Attachment via shaft Ø ..... · Length ..... mm ☐ Attachment to flywheel SAE ....."

☐ Motor rigidly ☐ Motor flexibly installed on foundation/base frame

3. Data for driven machine

3.1 Type of driven machine: .....

3.2 Required power rating P_2: ..... kW at n_2 = ... rpm

3.3 Mass moment of inertia J = ... kgm^2 (based on n_2)

3.4 Operational cycle: ☐ uniform operation ☐ non uniform operation

3.4.1. Starting frequency min.: ☐ 1 x / day ☐ 1 x / week ☐ 1 x / month ☐ Continuous operation (min. 2 months without stopping)

Starting frequency max.: ☐ < 3 x in succession Number in succession: .....

☐ < 5 x / hour Number per hour: .....

3.4.2. Duty cycle per operational cycle: ☐ 60 - 100% ☐ ED = ... %

3.4.3. Dimensions of the gear unit/machine shaft on the coupling side Ø ..... · Length ..... mm

4. Ambient conditions

4.1 Place of installation: ☐ < 1000 m a.s.l. ☐ ..... m a.s.l.

☐ out of doors ☐ in narrow space ☐ other: .....

4.2 Temperature of the ambient air (cooling air): min. .....°C max. ..... °C

4.3 ☐ Fitting into guard ☐ bell housing

Holes: ☐ with large (well ventilated) ☐ with small (less well ventilated)

☐ without holes: ☐ with forced ventilation ☐ without forced ventilation

4.4 Environment: ☐ normally dusty ☐ extremely dusty ☐ abrasively dusty

☐ aggressive atmosphere: .....

4.5 Use in potentially explosive atmospheres

☐ in conformity with ATEX: II 2G Ex h IIB T3 Gb X / II 2D Ex h IIIC T160 °C Db X / I M2 Ex h Mb X

☐ other class: .....

5. Arrangement of coupling

5.1 ☐ horizontal ☐ at an angle (max 20°) ☐ vertical: motor overhead ☐ vertical: motor underneath

5.2

between:	and:
Motor ☐	☐ Driven machine
Gear unit (n_1 = ... rpm) ☐	☐ Gear unit
Transmission/belt drives ☐	☐ Transmission/belt drives

FLUDEX COUPLING AS AN AID FOR STARTING THE IEC MOTORS

Speed *n* = 1500 rpm, Type FAR with fitted V-belt pulley

This assignment offers safety in normal load cases and includes standard types with 140 °C fusible safety plugs, for horizontal fitting and an ambient air temperature from -40 °C to +40 °C.

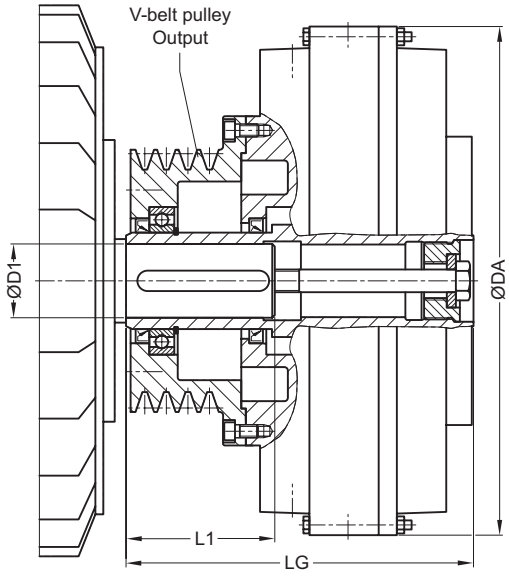

Three-phase motor Size	1500 min-1 P_M kW	D1 · L1 mm	FLUDEX coupling Size	Oil filling l	DA mm	LG mm	V-belt pulley Profile, pitch Ø mm	Chamfer number	Recommended no. of belts	↗ Article no. [1]	Weight m kg
80 M	0.55	19 · 40	222	0.9	263	153	SPZ 100	2	1	2LC0900-0AF90-0AA0	12
	0.75	19 · 40		1			SPZ 100	2	1		
90 S	1.1	24 · 50		1.1			SPZ 100	2	1	2LC0900-0AF90-0AA0	
90 L	1.5	24 · 50		1.2			SPZ 100	2	1	2LC0900-0AF90-0AA0	
100 L	2.2	28 · 60		1.4			SPZ 100	2	2	2LC0900-0AF90-0AA0	
	3	28 · 60		1.5			SPZ 100	2	2		
112 M	4	28 · 60		1.55			SPZ 160	3	2	2LC0900-0AF91-0AA0	14
132 S	5.5	38 · 80		1.55			SPZ 160	3	2	2LC0900-0AF91-0AA0	

Configurable variants [1]

- Delivery without oil filling
  Delivery with oil filling with specification of oil filling quantity in l
  Delivery without oil filling with oil filling quantity specification in l

[1] To identify complete item numbers specifying the available finish boring options and – if necessary – further order options, please use our configurators on **flender.com**.

[2] Flank-open belts required.

↗ For online configuration on **flender.com**, click on the item no.

Three-phase motor			FLUDEX coupling				V-belt pulley			↗ Article no. [1]	
Size	1500 min⁻¹		Size	Oil filling			Profile, pitch Ø	Chamfer number	Recommended no. of belts		Weight
	P_M	D1 · L1			DA	LG					*m*
	kW	mm		l	mm	mm	mm				kg
132 M	7.5	38 · 80	**297**	3.2	340	226	SPZ 150	5	3	**2LC0900-1AF90-0AA0**	27
160 M	11	42 · 110		3.5			SPZ 150	5	4	**2LC0900-1AF90-0AA0**	
160 L	15	42 · 110		3.7			SPZ 150	5	5	**2LC0900-1AF90-0AA0**	
180 M	18.5	48 · 110		3.7			SPA 190	4	4	**2LC0900-1AF91-0AA0**	32
180 L	22	48 · 110	**342**	5.5	400	278	SPA 180	5	5	**2LC0900-2AF90-0AA0**	40
200 L	30	55 · 110		6			SPA 180	5	5 [2]	**2LC0900-2AF90-0AA0**	
225 S	37	60 · 140	**395**	7.6	448	325	SPB 224	5	5	**2LC0900-3AF90-0AA0**	63
225 M	45	60 · 140		7.9			SPB 224	5	5	**2LC0900-3AF90-0AA0**	
250 M	55	65 · 140		8.4			SPB 224	5	5 [2]	**2LC0900-3AF90-0AA0**	
280 S	75	75 · 140	**450**	10.8	512	410	SPB 250	8	7	**2LC0900-4AF90-0AA0**	94
280 M	90	75 · 140		11.3			SPB 250	8	8	**2LC0900-4AF90-0AA0**	
315 S	110	80 · 170		12			SPB 250	8	8 [2]	**2LC0900-4AF90-0AA0**	
315 M	132	80 · 170	**516**	17.7	584	491	SPB 315	10	10	**2LC0900-5AF90-0AA0**	152
	160	80 · 170		18.6			SPB 315	10	10 [2]		

Configurable variants [1]

- Delivery without oil filling
  Delivery with oil filling with specification of oil filling quantity in l
  Delivery without oil filling with oil filling quantity specification in l

Notes

- The specified coupling weights are effective for maximum bores without oil filling.
- Delivery with oil filling only above -20 °C
- Axial retention is provided by a set screw and/or end washer with a retaining screw for shaft ends to DIN 748/1 long with a centering thread to DIN 332/2.
- For mass moments of inertia, centroidal distance Y and weight FY, see Page 13/18.

Ordering example

- Drive with motor 200 L, 30 kW at 1470 rpm with starting clutch and pulley
- FLUDEX FAR 342 coupling, standard type
- Hollow shaft: Bore ØD1 = 55H7 with keyway to DIN 6885/1 and retaining screw, with pulley 5xSPA Ø180.

Article no. delivery without oil filling:
2LC0900-2AF90-0AA0-Z L1D

Article no. delivery with oil filling:
2LC0900-1AF90-0AA0-Z L1D+F16+Y90
Plain text to Y90: 6.0 l

Article no. delivery with specification of oil filling quantity:
2LC0900-1AF90-0AA0-Z L1D+Y90
Plain text to Y90: 6.0 l

[1] To identify complete item numbers specifying the available finish boring options and – if necessary – further order options, please use our configurators on **flender.com**.

[2] Flank-open belts required.

↗ For online configuration on **flender.com**, click on the item no.

FLUDEX COUPLING AS AN AID FOR STARTING THE IEC MOTORS

Speed *n* = 1500 rpm, Type FAD with N-EUPEX D add-on coupling

This assignment offers safety in normal load cases and includes standard types with 140 °C fusible safety plugs, for horizontal fitting and an ambient air temperature from -40 °C to +40 °C.

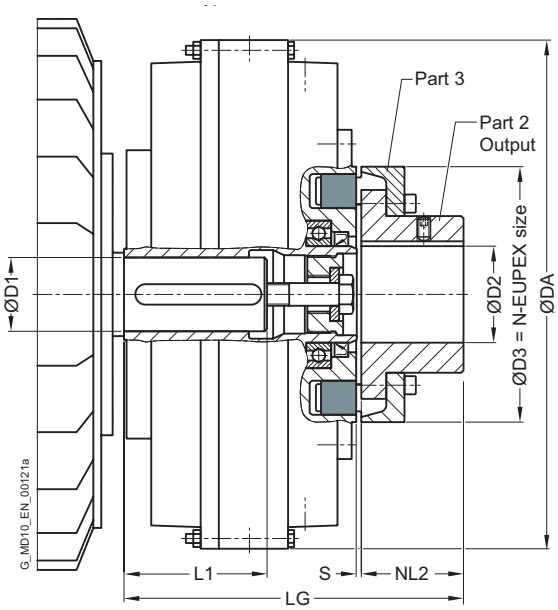

Three-phase motor Size	1500 min-1 P_M kW	D1 · L1 mm	FLUDEX coupling Size	Oil filling l	DA mm	LG mm	N-EUPEX D add-on coupling NL2 mm	D3 mm	D2[2] max. mm	↗ Article no. [1]	Weight m kg
80 M	0.55	19 · 40	222	0.9	263	180	40	110	38	2LC0900-0AA9	12
	0.75	19 · 40		1							
90 S	1.1	24 · 50		1.1						2LC0900-0AA9	
90 L	1.5	24 · 50		1.2						2LC0900-0AA9	
100 L	2.2	28 · 60		1.4						2LC0900-0AA9	
	3	28 · 60		1.5							
112 M	4	28 · 60		1.55						2LC0900-0AA9	
132 S	5.5	38 · 80		1.55						2LC0900-0AA9	

Configurable variants [1]

- ØD2 Without finished bore
  With finished bore

- Delivery without oil filling
  Delivery with oil filling with specification of oil filling quantity in l
  Delivery without oil filling with oil filling quantity specification in l

[1] To identify complete item numbers specifying the available finish boring options and – if necessary – further order options, please use our configurators on **flender.com**.

[2] Larger bores on the power takeoff side are possible with the FAE type.

↗ For online configuration on **flender.com**, click on the item no.

Three-phase motor Size	1500 min-1 P_M kW	D1 · L1 mm	FLUDEX coupling Size	Oil filling l	DA mm	LG mm	N-EUPEX D add-on coupling NL2 mm	D3 mm	D2 [2] max. mm	↗ Article no. [1]	Weight m kg
132 M	7.5	38 · 80	297	3.2	340	233	50	125	45	2LC0900-1AA9	24
160 M	11	42 · 110		3.5						2LC0900-1AA9	
160 L	15	42 · 110		3.7							
180 M	18.5	48 · 110		3.7						2LC0900-1AA9	
180 L	22	48 · 110	342	5.5	400	271	55	140	50	2LC0900-2AA9	34
200 L	30	55 · 110		6						2LC0900-2AA9	
225 S	37	60 · 140	395	7.6	448	299	90	225	85	2LC0900-3AA9	53
225 M	45	60 · 140		7.9							
250 M	55	65 · 140		8.4						2LC0900-3AA9	
280 S	75	75 · 140	450	10.8	512	338	100	250	95	2LC0900-4AA9	70
280 M	90	75 · 140		11.3							
315 S	110	80 · 170		12						2LC0900-4AA9	
315 M	132	80 · 170	516	17.7	584	398	125	315	120	2LC0900-5AA9	113
	160	80 · 170		18.6							

Configurable variants [1]

- ØD2 Without finished bore
  With finished bore
- Delivery without oil filling
  Delivery with oil filling with specification of oil filling quantity in l
  Delivery without oil filling with oil filling quantity specification in l

Notes

- The specified coupling weights are effective for maximum bores without oil filling.
- Delivery with oil filling only above -20 °C
- Axial retention is provided by a set screw and/or end washer with a retaining screw for shaft ends to DIN 748/1 long with a centering thread to DIN 332/2.
- For mass moments of inertia, centroidal distance Y and weight FY, see **Page 13/18**.

Ordering example

- Drive with motor 250 M, 55 kW at 1470 rpm with starting clutch for connecting two shafts.
- FLUDEX FAD 395 coupling, standard type
- Hollow shaft: Bore ØD1 = 65H7 with keyway to DIN 6885/1 and retaining screw
- Part 2: Bore ØD2 = 45H7 with keyway to DIN 6885/1 and set screw

Article no. delivery without oil filling:
2LC0900-3AA99-0AA0-Z L1F+M1A

Article no. delivery with oil filling:
2LC0900-3AA99-0AA0-Z L1F+M1A+F16+Y90
Plain text to Y90: 8.4 l

Article no. delivery with specification of oil filling quantity:
2LC0900-3AA99-0AA0-Z L1F+M1A+Y90
Plain text to Y90: 8.4 l

[1] To identify complete item numbers specifying the available finish boring options and – if necessary – further order options, please use our configurators on **flender.com**.

[2] Larger bores on the power takeoff side are possible with the FAE type.

↗ For online configuration on **flender.com**, click on the item no.

FLUDEX COUPLING AS AN AID FOR STARTING THE IEC MOTORS

Speed *n* = 3000 rpm, Type FAR with fitted V-belt pulley

This assignment offers safety in normal load cases and includes standard types with 140 °C fusible safety plugs, for horizontal fitting and an ambient air temperature from -40 °C to +40 °C.

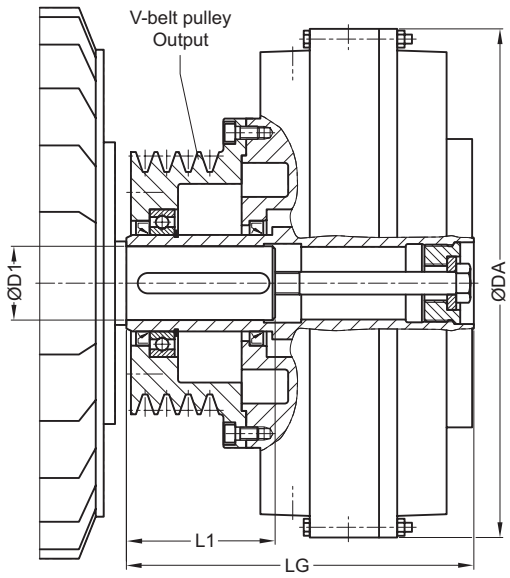

13

Three-phase motor Size	3000 min-1 P_M kW	D1 · L1 mm	FLUDEX coupling Size	Oil filling l	DA mm	LG mm	V-belt pulley Profile, pitch Ø mm	Chamfer number	Recommended no. of belts	↗ Article no. [1]	Weight m kg
90 S	1.5	24 · 50		0.7			SPZ 100	2	1	2LC0900-0AF90-0AA0	
90 L	2.2	24 · 50		0.8			SPZ 100	2	1		
100 L	3	28 · 60		0.9			SPZ 100	2	1	2LC0900-0AF90-0AA0	12
112 M	4	28 · 60		1			SPZ 100	2	2	2LC0900-0AF90-0AA0	
132 S	5.5	38 · 80	222	1	263	153	SPZ 100	2	2	2LC0900-0AF90-0AA0	
	7.5	38 · 80		1.1			SPZ 160	3	2	2LC0900-0AF91-0AA0	
160 M	11	42[3] · 110		1.2			SPZ 160	3	2	2LC0900-0AF91-0AA0	14
	15	42[3] · 110		1.3			SPZ 160	3	3		
160 L	18.5	42[3] · 110		1.4			SPZ 160	3	3	2LC0900-0AF91-0AA0	

Configurable variants [1]

- Delivery without oil filling
  Delivery with oil filling with specification of oil filling quantity in l
  Delivery without oil filling with oil filling quantity specification in l

[1] To identify complete item numbers specifying the available finish boring options and – if necessary – further order options, please use our configurators on **flender.com**.

[2] Flank-open belts required.

[3] Version with flat groove as per DIN 6885/3.

↗ For online configuration on **flender.com**, click on the item no.

Three-phase motor			FLUDEX coupling				V-belt pulley			↗ Article no. [1]	Weight
Size	3000 min-1		Size	Oil filling			Profile, pitch Ø	Chamfer number	Recommended no. of belts		
	P_M	D1 · L1			DA	LG					*m*
	kW	mm		l	mm	mm	mm				kg
180 M	22	48 · 110		2.5			SPZ 150	5	4	**2LC0900-1AF90-0AA0**	27
200 L	30	55 · 110		2.7			SPZ 150	5	5	**2LC0900-1AF90-0AA0**	
	37	55 · 110	**297**	2.8	340	226	SPA 190	4	4	**2LC0900-1AF91-0AA0**	32
225 M	45	55 · 110		2.9			SPA 224	5	4	**2LC0900-1AF92-0AA0**	35
250 M	55	60[3] · 140		3.1			SPA 224	5	5	**2LC0900-1AF92-0AA0**	
280 S	75	65 · 140		5.3			SPB 236	7	5	**2LC0900-3AF91-0AA0**	70
280 M	90	65 · 140		5.6			SPB 236	7	6	**2LC0900-3AF91-0AA0**	
315 S	110	65 · 140	**395**	5.9	448	363.5	SPB 236	7	7	**2LC0900-3AF91-0AA0**	
315 M	132	65 · 140		6.2			SPB 236	7	7[2]	**2LC0900-3AF91-0AA0**	
315 L	160	65 · 140		6.8			SPB 280	7	7[2]	**2LC0900-3AF92-0AA0**	83

Configurable variants [1]

- Delivery without oil filling
  Delivery with oil filling with specification of oil filling quantity in l
  Delivery without oil filling with oil filling quantity specification in l

Notes

- The specified coupling weights are effective for maximum bores without oil filling.
- Delivery with oil filling only above -20 °C
- Axial retention is provided by a set screw and/or end washer with a retaining screw for shaft ends to DIN 748/1 long with a centering thread to DIN 332/2.
- For mass moments of inertia, centroidal distance Y and weight FY, see **Page 13/18**.

Ordering example

- Drive with motor 200 L, 37 kW at 2950 rpm with starting clutch and pulley
- FLUDEX FAR 297 coupling, standard type
- Hollow shaft: Bore ØD1 = 55H7 with keyway to DIN 6885/1 and retaining screw, with pulley 4xSPA Ø190.

Article no. delivery without oil filling:
2LC0900-1AF91-0AA0-Z L1D+W03+Y95

Article no. delivery with oil filling:
2LC0900-1AF91-0AA0-Z L1D+W03+F16+Y90
Plain text to Y90: 2,8 l

Article no. delivery with specification of oil filling quantity:
2LC0900-1AF91-0AA0-Z L1D+W03+F16+Y90
Plain text to Y90: 2,8 l

[1] To identify complete item numbers specifying the available finish boring options and – if necessary – further order options, please use our configurators on **flender.com**.

[2] Flank-open belts required.

[3] Version with flat groove as per DIN 6885/3.

↗ For online configuration on **flender.com**, click on the item no.

FLUDEX COUPLING AS AN AID FOR STARTING THE IEC MOTORS

Speed *n* = 3000 rpm, Type FAD with N-EUPEX D add-on coupling

This assignment offers safety in normal load cases and includes standard types with 140 °C fusible safety plugs, for horizontal fitting and an ambient air temperature from -40 °C to +40 °C.

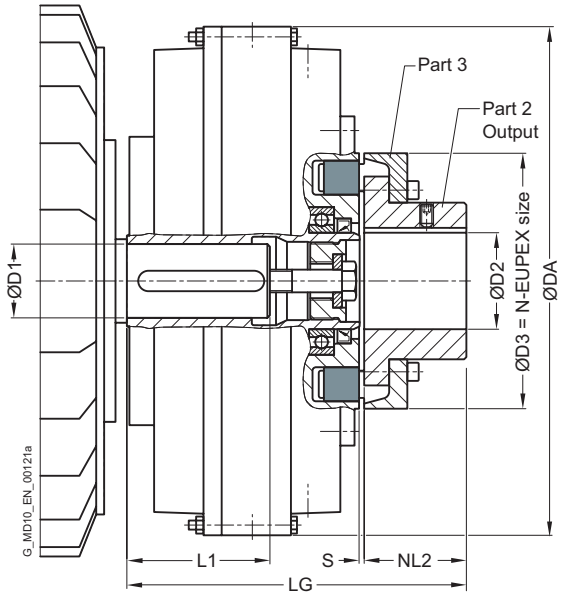

13

Three-phase motor Size	3000 min-1 P_M kW	D1 · L1 mm	FLUDEX coupling Size	Oil filling l	DA mm	LG mm	N-EUPEX D add-on coupling NL2 mm	D3 mm	D2 [2] max. mm	↗ Article no. [1]	Weight m kg
90 S	1.5	24 · 50		0.7						2LC0900-0AA9	
90 L	2.2	24 · 50		0.8							
100 L	3	28 · 60		0.9						2LC0900-0AA9	
112 M	4	28 · 60		1						2LC0900-0AA9	
132 S	5.5	38 · 80	222	1	263	180	40	110	38	2LC0900-0AA9	12
	7.5	38 · 80		1.1							
160 M	11	42[3] · 110		1.2						2LC0900-0AA9	
	15	42[3] · 110		1.3							
160 L	18.5	42[3] · 110		1.4						2LC0900-0AA9	

Configurable variants [1]

- ØD2 Without finished bore
  With finished bore
- Delivery without oil filling
  Delivery with oil filling with specification of oil filling quantity in l
  Delivery without oil filling with oil filling quantity specification in l

[1] To identify complete item numbers specifying the available finish boring options and – if necessary – further order options, please use our configurators on **flender.com**.

[2] Larger bores on the power takeoff side are possible with the FAE type.

[3] Version with flat groove as per DIN 6885/3.

↗ For online configuration on **flender.com**, click on the item no.

Three-phase motor Size	3000 min-1 P_M kW	D1 · L1 mm	FLUDEX coupling Size	Oil filling l	DA mm	LG mm	N-EUPEX D add-on coupling NL2 mm	D3 mm	D2 [2] max. mm	↗ Article no. [1]	Weight m kg
180 M	22	48 · 110		2.5						2LC0900-1AA9	
200 L	30	55 · 110		2.7						2LC0900-1AA9	
200 L	37	55 · 110	297	2.8	340	233	50	125	45		24
225 M	45	55 · 110		2.9						2LC0900-1AA9	
250 M	55	60[3] · 140		3.1						2LC0900-1AA9	
280 S	75	65 · 140		5.3						2LC0900-3AA9	
280 M	90	65 · 140		5.6							
315 S	110	65 · 140	395	5.9	448	299	90	225	85		53
315 M	132	65 · 140		6.2						2LC0900-3AA9	
315 L	160	65 · 140		6.8							

Configurable variants [1]

- ØD2 Without finished bore
  With finished bore
- Delivery without oil filling
  Delivery with oil filling with specification of oil filling quantity in l
  Delivery without oil filling with oil filling quantity specification in l

Notes

- The specified coupling weights are effective for maximum bores without oil filling.
- Delivery with oil filling only above -20 °C
- Axial retention is provided by a set screw and/or end washer with a retaining screw for shaft ends to DIN 748/1 long with a centering thread to DIN 332/2.
- For mass moments of inertia, centroidal distance Y and weight FY, see Page 13/18.

Ordering example

- Drive with motor 280 M, 90 kW at 2950 rpm with starting clutch for connecting two shafts.
- FLUDEX FAD 395 coupling, standard type
- Hollow shaft: Bore ØD1 = 65H7 with keyway to DIN 6885/1 and retaining screw
- Part 2: Bore ØD2 = 60H7 with keyway to DIN 6885/1 and set screw

Article no. delivery without oil filling:
2LC0900-3AA99-0AA0-Z L1F+M1E+W03

Article no. delivery with oil filling:
2LC0900-3AA99-0AA0-Z L1F+M1E+W03+F16+Y90
Plain text to Y90: 5.6 l

Article no. delivery with specification of oil filling quantity:
2LC0900-3AA99-0AA0-Z L1F+M1E+W03+Y90
Plain text to Y90: 5.6 l

[1] To identify complete item numbers specifying the available finish boring options and – if necessary – further order options, please use our configurators on **flender.com**.

[2] Larger bores on the power takeoff side are possible with the FAE type.

[3] Version with flat groove as per DIN 6885/3.

↗ For online configuration on **flender.com**, click on the item no.

TYPE FAO

Size 222

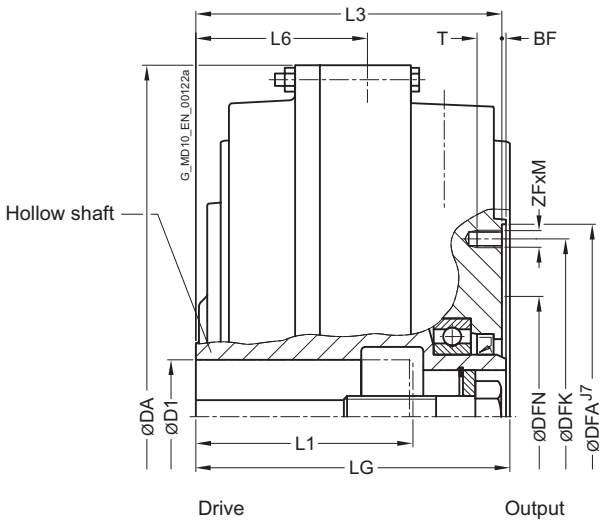

Sizes 297 ... 590

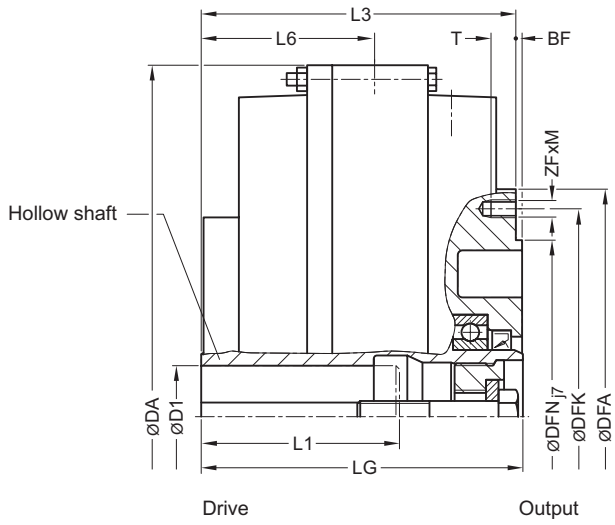

Size	Maximum speed	FLUDEX coupling installation dimensions								Flange connection dimensions						Tightening torque for screws in thread ZF x M	↗ Article no. [1]	Weight
	n_{Kmax}	D1 Keyway to DIN 6885			L1	DA	L3	L6	LG	DFN	DFA	BF	DFK	ZF · M	T	T_A		*m*
		min.	max.	Preferred bore	max.													
	rpm	mm	mm	mm	mm	mm	mm	mm	mm	mm	mm	mm	mm		mm	Nm		kg
222	3600	>38 [2]	**38** / **42** [2]	28	80	263	110	58	112	90	144	2	128	6 · M8	12	18.7	**2LC0900-0AG90-0AA0**	10
297	3600	>38 / >55 [2]	**38** / **55** / **60** [2]	42	80 / 110 / 110	340	145	83	150	125	195	3	172	6 · M8	12	18.7	**2LC0900-1AG90-0AA0**	18
342	3600	>55 [2]	**55** / **60** [2]	48 + 55	110 / 120	400	174	101	180	140	230	4	205	8 · M10	15	31	**2LC0900-2AG90-0AA0**	26
395	3000		**65**	60 + 65	140	448	200.5	110.5	205	225	290	4	265	8 · M12	18	54	**2LC0900-3AG90-0AA0**	40

Configurable variants [1]

- Delivery without oil filling
  Delivery with oil filling with specification of oil filling quantity in l
  Delivery without oil filling with oil filling quantity specification in l

[1] To identify complete item numbers specifying the available finish boring options and – if necessary – further order options, please use our configurators on **flender.com**.

[2] Version with flat groove as per DIN 6885/3.

↗ For online configuration on **flender.com**, click on the item no.

Size	Maximum speed	FLUDEX coupling installation dimensions								Flange connection dimensions						Tightening torque for screws in thread ZF x M	↗ Article no. [1]	Weight
	n_{Kmax}	D1 Keyway to DIN 6885			L1	DA	L3	L6	LG	DFN	DFA	BF	DFK	ZF · M	T	T_A		m
		min.	max.	Preferred bore	max.													
	rpm	mm	mm	mm	mm	mm	mm	mm	mm	mm	mm	mm	mm		mm	Nm		kg
450	3000		**75**	65 + 75	140	512	228	126	233	250	310	4	285	8 · M12	18	54	**2LC0900-4AG90-0AA0**	53
		>75	**80**		170													
516	2300		**55**		140	584	263	147	270	315	390	5	360	8 · M16	24	135	**2LC0900-5AG90-0AA0**	84
		>55	**90**	80	170													
590	2000		**75**		140	662	298	166	305	315	390	5	360	8 · M16	24	135	**2LC0900-6AG90-0AA0**	109
		>75	**95**		170													
		>95	**100**		210													

Configurable variants [1]

- Delivery without oil filling
  Delivery with oil filling with specification of oil filling quantity in l
  Delivery without oil filling with oil filling quantity specification in l

Notes

- The specified coupling weights are effective for maximum bores without oil filling.
- Delivery with oil filling only above -20 °C
- For mass moments of inertia, centroidal distance Y and weight FY, see **Page 13/18**.

Ordering example

- Motor 37 kW, P_{eff} = 30 kW, n_1 = 1470 rpm, maximum output torque: $T_{max} = 2.0 \cdot T_{eff.}$
- FLUDEX FAO coupling size 342
- Hollow shaft: Bore ØD1 = 60H7 mm with keyway to DIN 6885/3 and retaining screw
- Seal set FPM
- Specification of oil filling quantity: 6.0 l **(see Page 13/9)**

Article no. with 160 °C fuse:
2LC0900-2AG90-0AA0-Z L1E+F08+Y90
Plain text to Y90: 6.0 l

[1] To identify complete item numbers specifying the available finish boring options and – if necessary – further order options, please use our configurators on **flender.com**.

[2] Version with flat groove as per DIN 6885/3.

↗ For online configuration on **flender.com**, click on the item no.

TYPE FAR

with attached v-belt pulley

Variants A and G

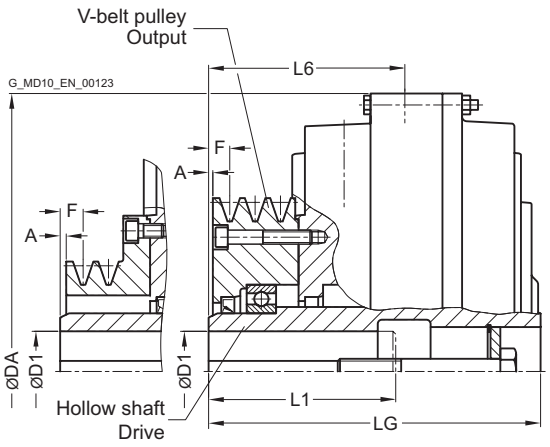

Variant A Variant G

Variants N and H

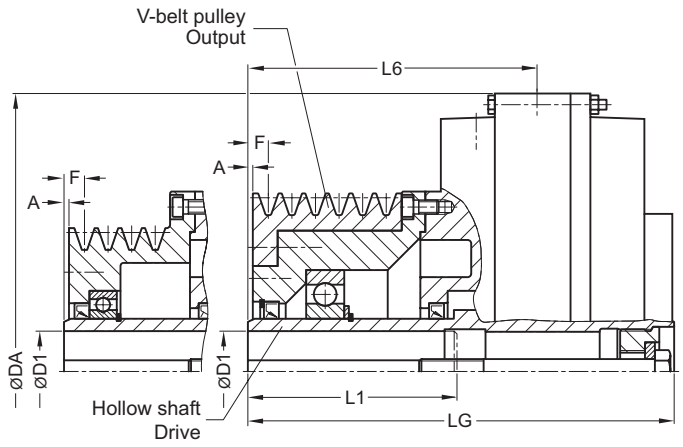

Variant N Variant H

Size	Maximum speed n_{Kmax} rpm	FLUDEX coupling D1 Keyway to DIN 6885 min. mm	max. mm	Preferred bore mm	L1 max. mm	DA mm	L6 mm	LG mm	V-belt pulley Profile, pitch Ø mm	Chamfer number	A mm	F mm	Type	↗ Article no. [1]	Weight m kg
222	3600		**28**	28	60	263	95	153	SPZ 100	2	1	9	A	**2LC0900-0AF90-0AA0**	12
		>28	**38**		105				SPZ 160	3			G	**2LC0900-0AF91-0AA0**	14
		>38 [2]	**42** [2]		110										
297	3600		**38**		80	340	143	226	SPZ 150	5	2	10	N	**2LC0900-1AF90-0AA0**	27
		>38	**55**	42	110										
		>55 [2]	**59** [2]		110				SPA 190	4	0		H	**2LC0900-1AF91-0AA0**	32
		>59 [2]	**60** [2]		140				SPA 224	5	0		G	**2LC0900-1AF92-0AA0**	35
342	3600		**55**	55	110	400	177	278	SPA 180	5	4	14	N	**2LC0900-2AF90-0AA0**	40
395	3000		**55**		110	448	214.5	325	SPB 224	5	4	16.5	N	**2LC0900-3AF90-0AA0**	63
		>55	**65**	60 + 65	140										
	3000		**55**		110	448	253	363.5	SPB 236	7			N	**2LC0900-3AF91-0AA0**	70
	2700	>55	**75**		140				SPB 280	7			H	**2LC0900-3AF92-0AA0**	83

Configurable variants [1]

- Delivery without oil filling
  Delivery with oil filling with specification of oil filling quantity in l
  Delivery without oil filling with oil filling quantity specification in l

[1] To identify complete item numbers specifying the available finish boring options and – if necessary – further order options, please use our configurators on **flender.com**.

[2] Version with flat groove as per DIN 6885/3.

↗ For online configuration on **flender.com**, click on the item no.

Size	Maximum speed	FLUDEX coupling							V-belt pulley					↗ Article no. [1]	Weight
		D1 Keyway to DIN 6885			L1	DA	L6	LG	Profile, pitch Ø	Chamfer number	A	F	Type		
	n_{Kmax}	min.	max.	Preferred bore	max.										m
	rpm	mm	mm	mm	mm	mm	mm	mm	mm		mm	mm			kg
450	3000		**55**		110	512	284	410	SPB 250	8	4	16.5	N	**2LC0900-4AF90-0AA0**	94
		>55	**75**	65 + 75	140										
		>75	**80**		170										
516	2300		**55**		110	584	344	491	SPB 315	10	4	16.5	N	**2LC0900-5AF90-0AA0**	152
		>55	**75**		140										
		>75	**95**		170										
		>95	**100**		210										
590	2000		**55**		110	662	476	642	SPC 315	12	4	21	N	**2LC0900-6AF90-0AA0**	208
		>55	**75**		140										
		>75	**95**		170										
		>95	**100**		210										

Configurable variants [1]

- Delivery without oil filling
  Delivery with oil filling with specification of oil filling quantity in l
  Delivery without oil filling with oil filling quantity specification in l

Notes

- The specified coupling weights are effective for maximum bores without oil filling.
- Delivery with oil filling only above -20 °C

Ordering example

- Motor 45 kW, P_{eff} = 37 kW, n_1 = 1470 rpm, maximum output torque: $T_{max} = 2.0 \cdot T_{eff.}$
- FLUDEX FAR coupling size 395
- Hollow shaft: Bore ØD1 = 60H7 mm with keyway to DIN 6885/1 and retaining screw
- Specification of oil filling quantity: 7.6 l **(see Page 13/9)**

Article no. with pulley 5xSPB224:
2LC0900-3AF90-0AA0-Z L1E+Y90
Plain text to Y90: 7.6 l

Article no. with pulley 7xSPB236:
2LC0900-3AF91-0AA0-Z L1E+Y90
Plain text to Y90: 7.6 l

Article no. with 160 °C fuse:
2LC0900-3AF90-0AA0-Z L1E+Y90+F08
Plain text to Y90: 7.6 l

[1] To identify complete item numbers specifying the available finish boring options and – if necessary – further order options, please use our configurators on **flender.com**.

[2] Version with flat groove as per DIN 6885/3.

↗ For online configuration on **flender.com**, click on the item no.

TYPE FAD

with N-EUPEX D add-on coupling

Enables change of flexible elements without axial displacement of the shafts if the space "A" is provided.

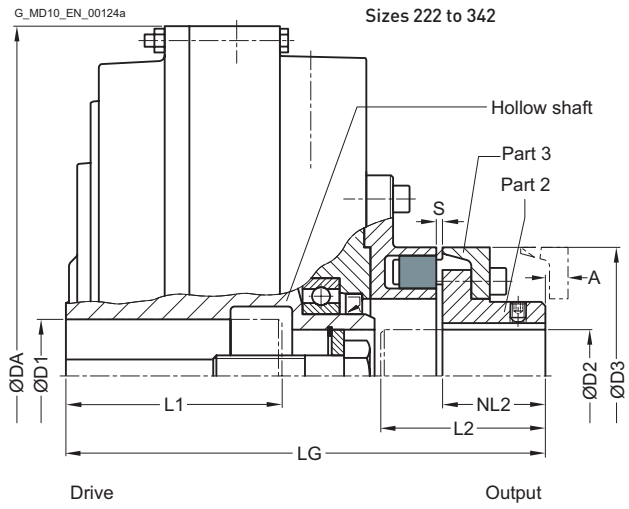

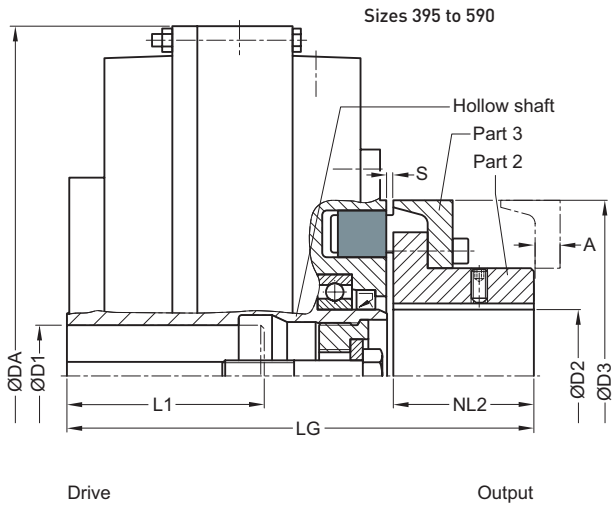

Size	Maximum speed n_{Kmax} rpm	FLUDEX coupling D1 Keyway to DIN 6885 min. mm	max. mm	Preferred bore mm	L1 max. mm	DA mm	LG mm	N-EUPEX D add-on coupling D2 max. mm	L2 max. mm	NL2 mm	Size D3 mm	S mm	A mm	↗ Article no. [1]	Weight m kg
222	3600		**38**	28	80	263	180	**38**	65	40	**110**	3^{+1}_{-1}	13	**2LC0900-0AA9**	12
		>38 [2]	**42** [2]												
297	3600		**38**		80	340	233	**45**	80	50	**125**	3^{+1}_{-1}	11	**2LC0900-1AA9**	24
		>38	**55**	42	110										
		>55 [2]	**60** [2]		110										
342	3600		**55**	48 + 55	110	400	271	**50**	88	55	**140**	3^{+1}_{-1}	16	**2LC0900-2AA9**	34
		>55 [2]	**60** [2]		120										
395	3000		**65**	60 + 65	140	448	299	**85**	90	90	**225**	$4{,}5^{+1.5}_{-1.5}$	9	**2LC0900-3AA9**	53
450	3000		**75**	65 + 75	140	512	338	**95**	100	100	**250**	6^{+2}_{-3}	11	**2LC0900-4AA9**	70
		>75	**80**		170										
516	2300		**55**		140	584	398	**120**	125	125	**315**	5^{+3}_{-2}	0	**2LC0900-5AA9**	113
		>55	**90**	80	170										
590	2000		**75**		140	662	433	**120**	125	125	**315**	5^{+3}_{-2}	0	**2LC0900-6AA9**	138
		>75	**95**		170										
		>95	**100**		210										

Configurable variants [1]

- ØD2 Without finished bore
  With finished bore
- Delivery without oil filling
  Delivery with oil filling with specification of oil filling quantity in l
  Delivery without oil filling with oil filling quantity specification in l

Notes

- The specified coupling weights are effective for maximum bores without oil filling.
- Delivery with oil filling only above -20 °C

Ordering example

- Motor 160 kW, P_{eff} = 132 kW, n_1 = 1470 rpm, maximum output torque: $T_{max} = 2.0 \cdot T_{eff.}$
- FLUDEX FAD coupling size 516
- Hollow shaft: Bore ØD1= 80H7 mm with keyway to DIN 6885/1 and retaining screw
- Part 2: with finished bore ØD2 = 80H7
- Specification of oil filling quantity: 17.7 l **(see Page 13/9)**

Article no.: 2LC0900-5AA99-0AA0-Z L1J+M1J+Y90
Plain text to Y90: 17.7 l

[1] To identify complete item numbers specifying the available finish boring options and – if necessary – further order options, please use our configurators on **flender.com**.

[2] Version with flat groove as per DIN 6885/3.

↗ For online configuration on **flender.com**, click on the item no.

TYPE FAE

with N-EUPEX E add-on coupling

Enables larger bores on the output side.

Sizes 222 ... 342

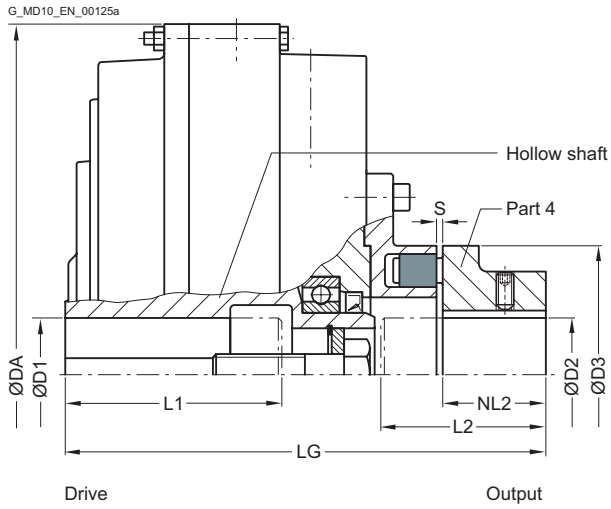

Sizes 395 ... 450

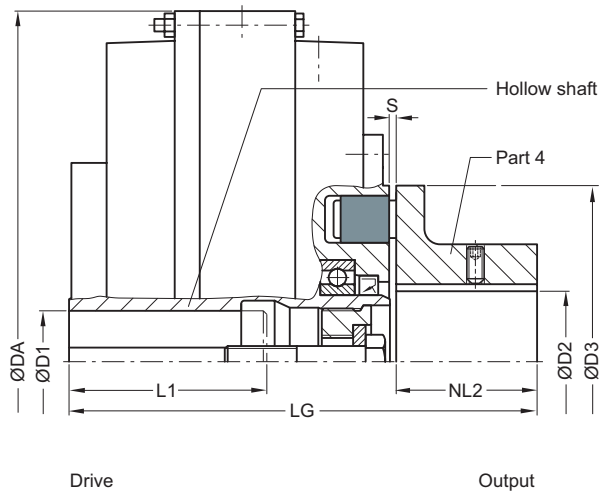

Size	Maximum speed n_{Kmax} rpm	FLUDEX coupling D1 Keyway to DIN 6885 min. mm	max. mm	Preferred bore mm	L1 max. mm	DA mm	LG mm	N-EUPEX E add-on coupling D2 max. mm	L2 max. mm	NL2 mm	Size D3 mm	S mm	↗ Article no. [1]	Weight m kg
222	3600		**38**	28	80	263	180	**48**	65	40	**110**	3^{+1}_{-1}	**2LC0900-0AB9**	12
		>38 [2]	**42** [2]											
297	3600		**38**		80	340	233	**55**	80	50	**125**	3^{+1}_{-1}	**2LC0900-1AB9**	24
		>38	**55**	42	110									
		>55 [2]	**60** [2]		110									
342	3600		**55**	48 + 55	110	400	271	**60**	88	55	**140**	3^{+1}_{-1}	**2LC0900-2AB9**	34
		>55 [2]	**60** [2]		120									
395	3000		**65**	60 + 65	140	448	299	**90**	90	90	**225**	$4{,}5^{+1.5}_{-1.5}$	**2LC0900-3AB9**	50
450	3000		**75**	65 + 75	140	512	338	**100**	100	100	**250**	6^{+2}_{-3}	**2LC0900-4AB9**	68
		>75	**80**		170									

Configurable variants [1]

- ØD2 Without finished bore
  With finished bore
- Delivery without oil filling
  Delivery with oil filling with specification of oil filling quantity in l
  Delivery without oil filling with oil filling quantity specification in l

Notes

- The specified coupling weights are effective for maximum bores without oil filling.
- Delivery with oil filling only above -20 °C

Ordering example

- Motor 45 kW, P_{eff} = 42 kW, n_1 = 2950 rpm
- FLUDEX FAE coupling size 342
- Hollow shaft: Bore ØD1 = 55H7 mm with keyway to DIN 6885/1 and retaining screw
- Part 4: Bore ØD2 = 60H7 mm with keyway to DIN 6885/1 and set screw
- with micro-balancing (high speed)
- with electronic operation monitoring
- seal set NBR
- Delivery without oil filling, no oil filling quantity specification

Article no. with EOC system:

2LC0900-2AB99-0AA0-Z L1D+M1E+F04+F26+W03+Y95
Plain text to Y95: G 6.3, n = 2950 rpm

[1] To identify complete item numbers specifying the available finish boring options and – if necessary – further order options, please use our configurators on **flender.com**.

[2] Version with flat groove as per DIN 6885/3.

↗ For online configuration on **flender.com**, click on the item no.

TYPE FAM

with N-EUPEX M add-on coupling

Enables a short fitting length.

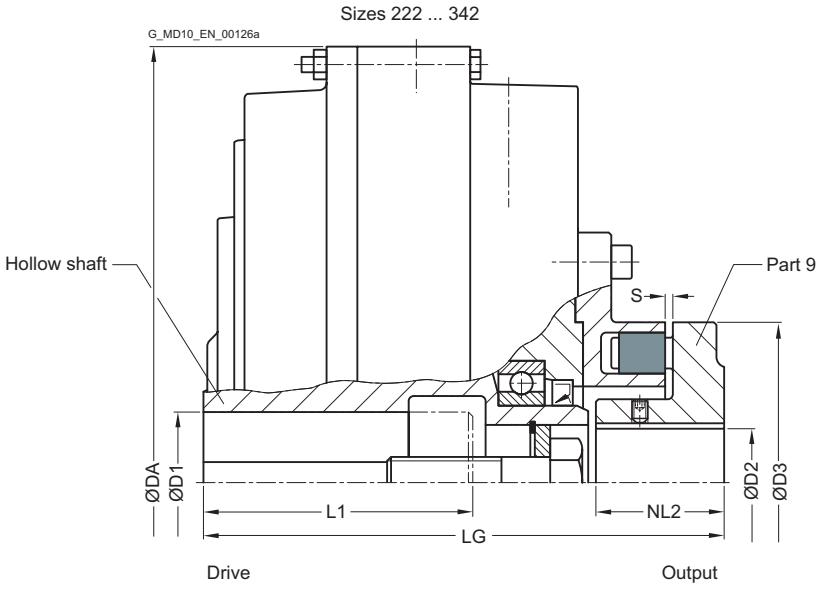

Size	Maximum speed n_{Kmax} rpm	FLUDEX coupling D1 Keyway to DIN 6885 min. mm	max. mm	Preferred bore mm	L1 max. mm	DA mm	LG mm	N-EUPEX M add-on coupling D2 max. mm	NL2 mm	Size D3 mm	S mm	↗ Article no. [1]	Weight m kg
222	3600		38	28	80	263	150	38	36	110	3^{+1}_{-1}	2LC0900-0AH9	12
		>38 [2]	42 [2]										
297	3600		38		80	340	203	48	50	125	3^{+1}_{-1}	2LC0900-1AH9	24
		>38	55	42	110								
		>55 [2]	60 [2]		110								
342	3600		55	48 + 55	110	400	238	52	55	140	3^{+1}_{-1}	2LC0900-2AH9	34
		>55 [2]	60 [2]		120								

13

Configurable variants [1]

- ØD2 Without finished bore
  With finished bore
- Delivery without oil filling
  Delivery with oil filling with specification of oil filling quantity in l
  Delivery without oil filling with oil filling quantity specification in l

Notes

- The specified coupling weights are effective for maximum bores without oil filling.
- Delivery with oil filling only above -20 °C

Ordering example

- Motor 22 kW, P_{eff} = 20 kW, n_1 = 1470 rpm
- FLUDEX FAM coupling size 342
- Hollow shaft: Bore ØD1 = 40H7 mm with keyway to DIN 6885/1 and retaining screw
- Part 9: Bore ØD2 = 48H7 mm with keyway to DIN 6885/1 and set screw
- Delivery without oil filling, no oil filling quantity specification

Article no. with drive via housing:
2LC0900-2AH99-0AA0-Z L0W+M1B+F23

[1] To identify complete item numbers specifying the available finish boring options and – if necessary – further order options, please use our configurators on **flender.com**.

[2] Version with flat groove as per DIN 6885/3.

↗ For online configuration on **flender.com**, click on the item no.

TYPE FADB

with N-EUPEX D add-on coupling and brake drum

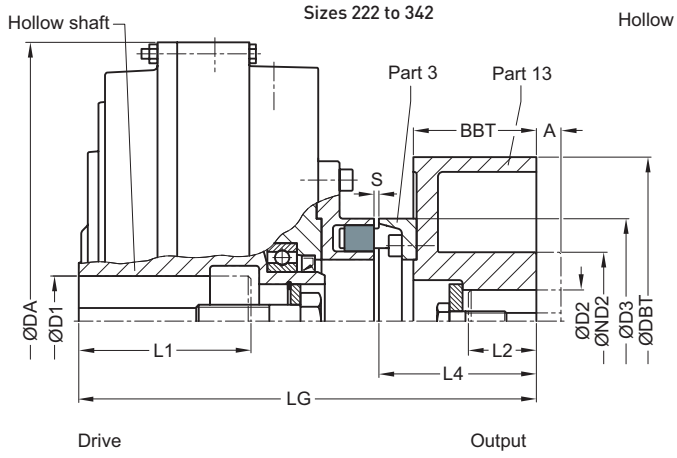

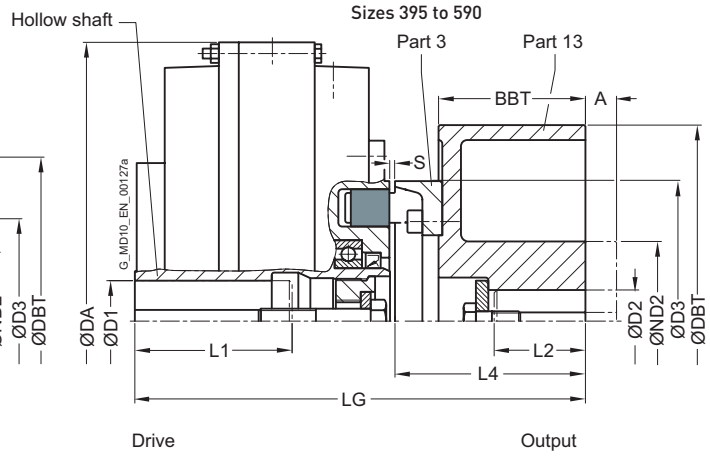

Size	Maximum speed n_{Kmax} rpm	FLUDEX coupling D1 Keyway DIN 6885 min. mm	max. mm	L1 max. mm	DA mm	LG mm	N-EUPEX D add-on coupling Size D3 mm	S mm	L4 mm	Brake drum (Part 13) D2 max. mm	ND2 mm	DBT mm	BBT mm	A mm	↗ Article no. [1]	Weight m kg
222	3600		**38**	80	263	232	**110**	3^{+1}_{-1}	92	**42**	68	200	75	30	**2LC0900-0AC9**	17
		>38 [2]	**42** [2]													
297	3600		**38**	80	340	279	**125**	3^{+1}_{-1}	96	**55**	84	200	75	30	**2LC0900-1AC9**	29
		>38	**55**	110												
		>55 [2]	**60** [2]	110												
342	3600		**55**	110	400	337	**140**	3^{+1}_{-1}	121	**60**	128 [3]	250	95	50	**2LC0900-2AC9**	48
		>55 [2]	**60** [2]	120												
395	3000		**65**	140	448	362	**225**	$4{,}5^{+1.5}_{-1.5}$	153	**80**	128	315	118	50	**2LC0900-3AC9**	71
450	3000		**75**	140	512	395	**250**	6^{+2}_{-3}	157	**80**	128	315	118	50	**2LC0900-4AC9**	86
		>75	**80**	170												
516	2300		**55**	140	584	466	**315**	5^{+3}_{-2}	193	**100**	160	400	150	80	**2LC0900-5AC9**	146
		>55	**90**	170												
590	1900		**75**	140	662	540	**315**	5^{+3}_{-2}	232	**110**	175	500	190	110	**2LC0900-6AC9**	207
		>75	**95**	170												
		>95	**100**	210												

Configurable variants [1]

- ØD2 Without finished bore
  With finished bore
- Part 13 Standard brake drum
  Long brake drum
- Delivery without oil filling
  Delivery with oil filling with specification of oil filling quantity in l
  Delivery without oil filling with oil filling quantity specification in l

Notes

- The specified coupling weights are effective for maximum bores without oil filling, without hub prolongations "A" but with set screw
- L2 denotes the shaft insertion depth.
  In the case of shaft ends deviating from DIN 748/1 long, the insertion depth must be specified in plain text with "**Y29**"
- Delivery with oil filling only above -20 °C

[1] To identify complete item numbers specifying the available finish boring options and – if necessary – further order options, please use our configurators on **flender.com**.

Ordering example

- Motor 30 kW, P_{eff} = 22 kW, n_1 = 1470 rpm
- FLUDEX FADB coupling size 342, standard type
- Hollow shaft: Bore ØD1 = 55H7 mm with keyway to DIN 6885/1 and retaining screw
- Brake drum (Part 13): Bore ØD2 = 50H7 mm with keyway to DIN 6885/1 and set screw.
- shaft end insertion depth L2 = 90 mm
- Delivery without oil filling, no oil filling quantity specification

Article no. Part 13 Standard brake drum:
2LC0900-2AC99-0AA0-Z L1D+M1C+Y29
Plain text to Y29: 90 mm

Article no. Part 13 Long brake drum:
2LC0900-2AC99-0BA0-Z L1D+M1C+Y29
Plain text to Y29: 90 mm

[2] Version with flat groove as per DIN 6885/3.

[3] ND2 = 128 for A = 0
ND2 = 100 for hub prolongations A = 50

↗ For online configuration on **flender.com**, click on the item no.

TYPE FADS SB

with N-EUPEX D add-on coupling and brake disk for stopping brakes

Sizes 222 ... 342

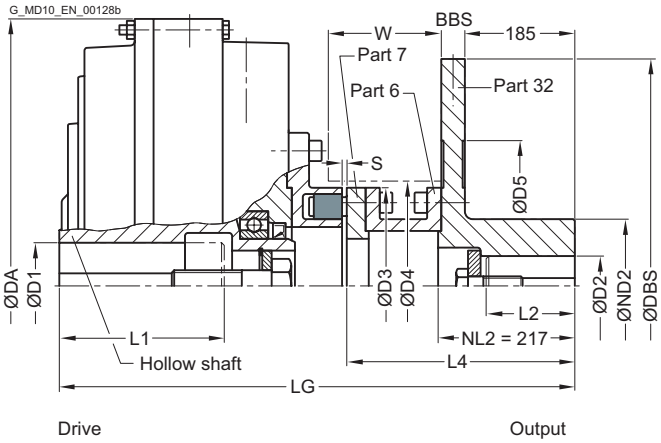

Sizes 395 ... 590

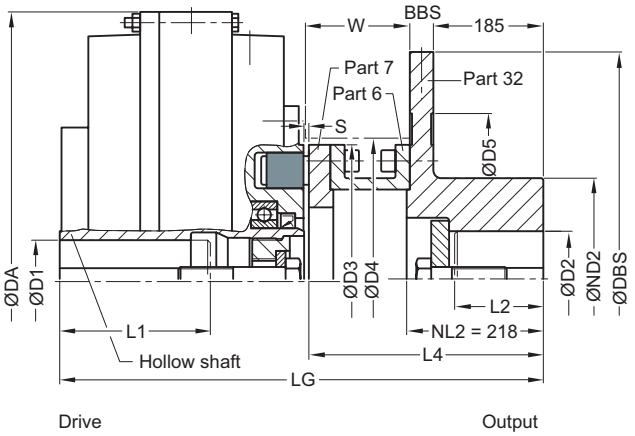

Size	Maximum speed n_{Kmax}	FLUDEX coupling D1 Keyway DIN 6885 min.	max.	L1 max.	DA	LG	N-EUPEX D add-on coupling Size D3	S	L4	Brake disk (part 32) [2] D2 max.	ND2	DBS	BBS	D5	Space dimensions D4	W	↗ Article no. [1]	Weight m
	rpm	mm	mm	mm	mm	mm	mm	mm	mm	mm	mm	mm	mm	mm	mm	mm		kg
222	3600		**38**	80	263	494	**110**	5^{+1}	352	**42**	100	315	30	165	115	149	**2LC0900-0AD9**	35
		>38 [3]	**42** [3]															
297	3600		**38**	80	340	537	**125**	5^{+1}	352	**60**	120	355	30	205	130	155	**2LC0900-1AD9**	68
		>38	**55**	110														
		>55 [3]	**60** [3]	110														
342	3300		**55**	110	400	570	**140**	5^{+1}	352	**60**	120	400	30	250	145	155	**2LC0900-2AD9**	83
		>55 [3]	**60** [3]	120														
395	3000		**65**	140	448	602	**225**	6^{+1}	391.5	**80**	150	450	30	300	230	182	**2LC0900-3AD9**	102
450	2300		**75**	140	512	630.5	**250**	8^{+1}	390.5	**90**	160	560	30	370	260	182	**2LC0900-4AD9**	141
		>75	**80**	170														
516	2100		**55**	140	584	706.5	**315**	8^{+1}	430.5	**100**	160	630	30	440	325	222	**2LC0900-5AD9**	199
		>55	**90**	170														
590	2000		**75**	140	662	741.5	**315**	8^{+1}	430.5	**100**	160	630	30	440	325	222	**2LC0900-6AD9**	224
		>75	**95**	170														
		>95	**100**	210														

Configurable variants [1]

- ØD2 Without finished bore
  With finished bore
- Delivery without oil filling
  Delivery with oil filling with specification of oil filling quantity in l
  Delivery without oil filling with oil filling quantity specification in l

Notes

- The specified coupling weights are effective for maximum bores without oil filling.
- L2 denotes the shaft insertion depth.
  In the case of shaft ends deviating from DIN 748/1 long, the insertion depth must be specified in plain text with "**Y29**"
- Delivery with oil filling only above -20 °C

Ordering example

- Motor 90 kW, P_{eff} = 75 kW, n_1 = 1470 rpm
- FLUDEX FADS SB coupling size 450
- Hollow shaft: Bore ØD1 = 75H7 mm with keyway to DIN 6885/1 and retaining screw
- Brake disk (part 32): Bore ØD2 = 80H7 mm with keyway to DIN 6885/1 and retaining screw
- with preservation suitable for indoor storage
- shaft end insertion depth L2 = 90 mm
- Delivery without oil filling, no oil filling quantity specification

Article no. with preservation 24 months:

2LC0900-4AD99-0AA0-Z L1H+M1J+B28+Y29
Plain text to Y29: L2 = 90 mm

[1] To identify complete item numbers specifying the available finish boring options and – if necessary – further order options, please use our configurators on **flender.com**.

[2] Hub shortening possible, clearly specify NL2 size

[3] Version with flat groove as per DIN 6885/3.

↗ For online configuration on **flender.com**, click on the item no.

TYPE FADS HB

with N-EUPEX D add-on coupling and brake disk for blocking brakes

Sizes 222 ... 342

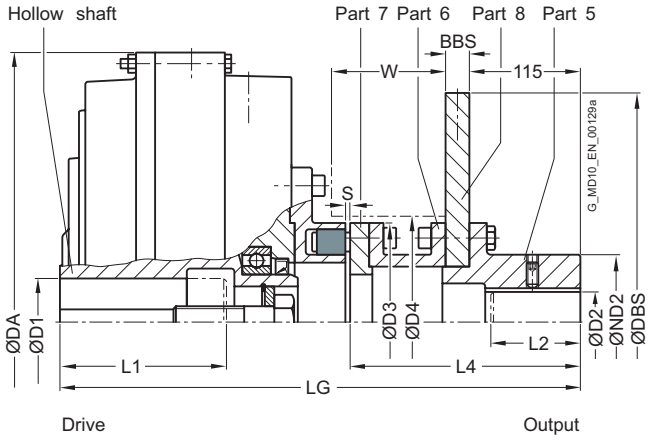

Sizes 395 ... 590

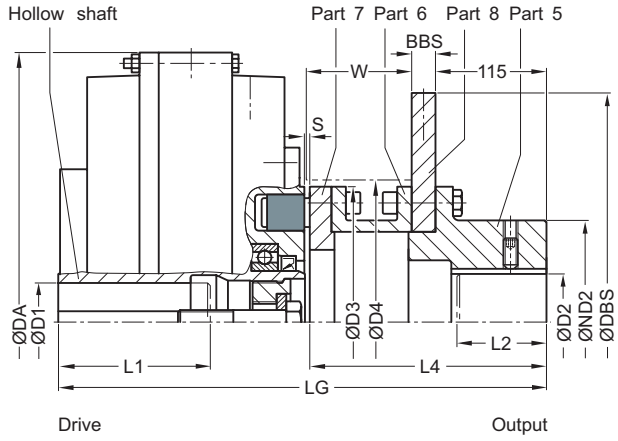

Size	Maximum speed	FLUDEX coupling					N-EUPEX D add-on coupling			Brake disk (part 5/8)				Space dimensions		↗ Article no. [1]	Weight
	n_{Kmax}	D1 Keyway DIN 6885		L1	DA	LG	Size D3	S	L4	D2	ND2	DBS	BBS	D4	W		*m*
		min.	max.	max.						max.							
	rpm	mm	mm	mm	mm	mm	mm	mm	mm	mm	mm	mm	mm	mm	mm		kg
222	3600	>38 [2]	**38**	80	263	366.5	**110**	5^{+1}	224.5	**42**	70	250	12.5	115	109	**2LC0900-0AE9**	22
			42 [2]														
297	3600	>38	**38**	80	340	409.5	**125**	5^{+1}	224.5	**60**	85	250	12.5	130	115	**2LC0900-1AE9**	33
			55	110													
		>55 [2]	**60** [2]	110													
342	3600	>55 [2]	**55**	110	400	442.5	**140**	5^{+1}	224.5	**60**	90	250	12.5	145	115	**2LC0900-2AE9**	45
			60 [2]	120													
395	3000		**65**	140	448	478	**225**	6^{+1}	267.5	**80**	150	355	16	230	142	**2LC0900-3AE9**	80
450	2750	>75	**75**	140	512	546.5	**250**	8^{+1}	306.5	**90**	160	355	16	260	182	**2LC0900-4AE9**	101
			80	170													
516	2150	>55	**55**	140	584	566.5	**315**	8^{+1}	290.5	**100**	160	450	16	325	166	**2LC0900-5AE9**	154
			90	170													
590	2000	>75	**75**	140	662	601.5	**315**	8^{+1}	290.5	**100**	160	450	16	325	166	**2LC0900-6AE9**	179
		>95	**95**	170													
			100	210													

Configurable variants [1]

- ØD2 Without finished bore
  With finished bore
- Delivery without oil filling
  Delivery with oil filling with specification of oil filling quantity in l
  Delivery without oil filling with oil filling quantity specification in l

Notes

- The specified coupling weights are effective for maximum bores without oil filling.
- L2 denotes the shaft insertion depth.
  In the case of shaft ends deviating from DIN 748/1 long, the insertion depth must be specified in plain text with "**Y29**"
- Delivery with oil filling only above -20 °C

Ordering example

- Motor 160 kW, P_{eff} = 132 kW, n_1 = 2950 rpm
- FLUDEX FADS HB coupling size 395
- Hollow shaft: Bore ØD1 = 65H7 mm with keyway to DIN 6885/1 and retaining screw
- Part 5: Bore ØD2 = 80H7 mm with keyway to DIN 6885/1 and set screw
- Delivery without oil filling, no oil filling quantity specification

Article no.: 2LC0900-3AE99-0AA0-Z L1F+M1J+W03+Y95
Plain text to Y95: G 6.3, n = 1500 rpm

[1] To identify complete item numbers specifying the available finish boring options and – if necessary – further order options, please use our configurators on **flender.com**.

[2] Version with flat groove as per DIN 6885/3.

↗ For online configuration on **flender.com**, click on the item no.

OIL FILLING QUANTITIES FOR FA SERIES

This assignment is valid for a maximum starting torque $T_{max} = 2.0 \cdot T_{eff}$ and mineral oils with a viscosity of VG 22/VG 32, with drive via the hollow shaft.

If other operating fluids are used, or with drive via the housing or $T_{max} \neq 2.0 \cdot T_{eff}$, changed filling quantities must be observed!

Sizes 222, 342, 450 and 590

P_{eff} kW	Speed in rpm 600	740	890	980	1180	1470	1770	2300	2950	3550	Size
	Oil filling quantity in l										
0.55	4.3		1.4	1.3	1.1						
0.75	4.7		1.5	1.4	1.2						
1.1	5.1	4.4	1.55	1.55	1.4	1.1					
2.2	6.2	5.2	4.5	4.2	1.55	1.4	1.2				
3	9.5	5.6	4.9	4.6	1.55	1.5	1.3	1			
4	10.2	6.1	5.3	4.9	4.3	1.55	1.4	1.1			
5.5	11	9.4	5.7	5.3	4.6	1.55	1.5	1.2	1		
7.5	12	10.2	6.2	5.8	5	4.3	1.55	1.3	1.1		
11	13.4	11.2	9.7	6.4	5.5	4.7	4.1	1.5	1.2	1	
15	24.8	12.2	10.5	9.8	6	5	4.4	1.55	1.3	1.1	
18	25.9	12.9	11	10.3	6.3	5.3	4.6	3.9	1.4	1.2	222
22	27.3	23.3	11.6	10.8	9.4	5.5	4.8	4	1.4	1.25	
30	29.7	25.2	12.7	11.7	10.1	6	5.2	4.3	3.7	1.4	
37	31.5	26.5	23.1	12.4	10.7	9.1	5.5	4.5	3.9	1.5	
45		27.9	24.2	22.6	11.2	9.5	5.8	4.7	4	3.5	
55		29.5	25.5	23.7	11.9	10	8.8	5	4.2	3.7	
75			27.6	25.7	22.3	10.8	9.4	5.4	4.5	3.9	342
90			29	26.9	23.4	11.3	9.8	8.1	4.7	4.1	
110				28.3	24.5	12	10.4	8.6	4.9	4.3	
132				29.7	25.7	21.9	10.8	8.9	7.6	4.5	
160					27	22.9	20	9.3	7.8		
180					27.8	23.5	20.6	10	8		
200					28.6	24.2	21.2	10.9	8.2		
225						24.9	21.8	11.5	8.5		450
250						25.6	22.3		9.6		
280						26.3	22.9		9.9		
315						27.1	23.6		10.5		
350							24.2				590
400							26.4				

Sizes 297, 395 and 516

P_{eff} kW	Speed in rpm 600	740	890	980	1180	1470	1770	2300	2950	3550	Size
	Oil filling quantity in l										
0.55	3.2	2.8									
0.75	3.5	3	2.6								
1.1	3.7	3.3	2.9	2.7							
2.2	7.3	3.7	3.4	3.2	2.8						
3	7.9	6.8	3.7	3.4	3	2.5					
4	8.5	7.3	3.7	3.7	3.2	2.7					
5.5	9.4	7.9	6.8	3.7	3.5	2.9	2.6				
7.5	17	8.5	7.4	6.9	3.7	3.2	2.8	2.4			
11	18.7	16	8.1	7.6	6.6	3.5	3	2.5			
15	20.3	17.3	8.9	8.2	7.1	3.7	3.3	2.7			
18	21.4	18	15.7	8.6	7.4	3.7	3.4	2.8	2.4		
22		19	16.5	15.4	7.8	6.6	3.6	3	2.5		
30		20.6	17.8	16.6	8.5	7.2	6.3	3.2	2.7	2.4	
37			18.8	17.5	15.2	7.6	6.6	3.4	2.8	2.5	
45			19.8	18.4	16	7.9	6.9	3.6	2.9	2.6	297
55			21	19.3	16.8	8.4	7.3	6	3.1	2.7	
75				21.1	18.1	15.4	7.9	6.5	5.3	2.9	
90					19	16.1	14.1	6.7	5.6	3	
110					20.1	16.9	14.8	7.1	5.9		
132						17.7	15.4	7.9	6.2		395
160						18.6	16.2	13.4	6.8		
180						19.2	16.7	13.8	7.2		
200							17.1	14.1			
225							17.6	14.6			
250							18.1	14.9			516
280								15.3			
315								15.8			
350								17.1			

13

TYPE FGO

Basic coupling of the FG series with connecting flange

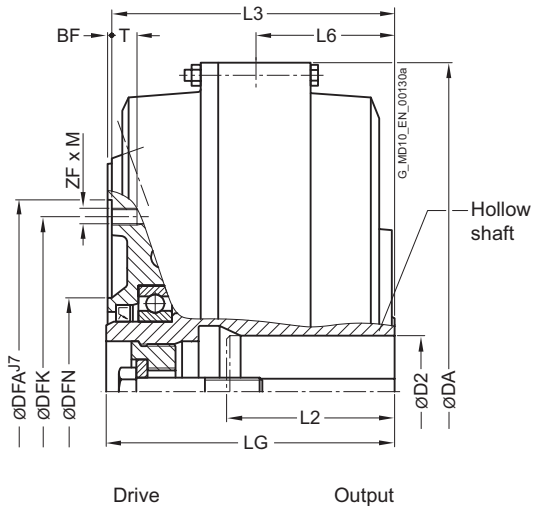

Size	Maximum speed	Installation dimensions							Flange connection dimensions						Tightening torque for screws in thread ZF · M	↗ Article no. [1]	Weight
	n_{Kmax}	D2 Keyway DIN 6885 min.	max.	L2 max.	DA	L3	L6	LG	DFN	DFA	BF	DFK	ZF · M	T	T_A		m
	rpm	mm	mm	mm	mm	mm	mm	mm	mm	mm	mm	mm		mm	Nm		kg
370	3600		**75**	140	420	182	84	185	126	220	3	200	8 · M10	15	31	**2LC0900-8CE09-0AA0**	34
425	3000		**80**	140	470	202	99	205	134	274	3	250	8 · M12	18	54	**2LC0901-0CE09-0AA0**	45
			55	110													
490	2600	>55	**75**	140	555	232	105	236	150	314	4	282	8 · M16	24	135	**2LC0901-1CE09-0AA0**	75
		>75	**100**	170													
565	2300		**110**	170	630	250	123	254	166	344	4	312	8 · M16	24	135	**2LC0901-2CE09-0AA0**	95
655	2000		**130**	210	736	296	145	301	180	430	5	390	8 · M20	25	260	**2LC0901-3CE09-0AA0**	142
755	1800		**150**	240	840	341	176	346	226	480	5	440	10 · M20	25	260	**2LC0901-4CE09-0AA0**	208
887	1500		**150**	275	990	391	217	396	249	520	5	480	10 · M20	25	260	**2LC0901-5CE09-0AA0**	362

13

Configurable variants [1]

- Delivery without oil filling
  Delivery with oil filling with specification of oil filling quantity in l
  Delivery without oil filling with oil filling quantity specification in l

Notes

- The specified coupling weights are effective for maximum bores without oil filling.
- Delivery with oil filling only above -20 °C

Ordering example

- Motor 132 kW, P_{eff} = 110 kW, n_1 = 1470 rpm
- FLUDEX FGO coupling size 490
- Hollow shaft: Bore ØD2 = 70H7 mm with keyway to DIN 6885/1 and retaining screw
- Delivery with oil filling: 14.4 l **(see Page 13/9)**

Article no.: 2LC0901-1CE09-0AA0-Z L1G+F16+Y90
Plain text to Y90: 14.4 l

[1] To identify complete item numbers specifying the available finish boring options and – if necessary – further order options, please use our configurators on **flender.com**.

↗ For online configuration on **flender.com**, click on the item no.

TYPE FGD

with N-EUPEX D add-on coupling

Enables change of flexible elements without axial displacement of the shafts if the space "A" is provided.

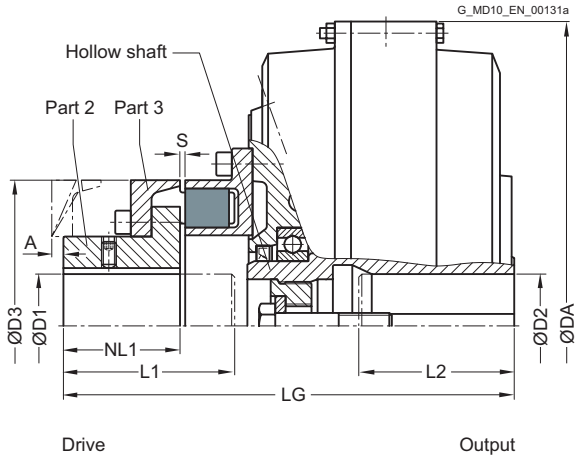

Size	Maximum speed n_{Kmax}	FLUDEX coupling D2 Keyway DIN 6885 min.	max.	L2 max.	DA	LG	N-EUPEX D add-on coupling D1 max.	L1 max.	NL1	Size D3	S	A	↗ Article no. [1]	Weight m
	rpm	mm	mm	mm	mm	mm	mm	mm	mm	mm	mm	mm		kg
370	3600		**75**	140	420	298	**65**	110	70	**180**	4^{+2}_{-2}	10	**2LC0900-8CA**	44
425	3000		**80**	140	470	348	**85**	140	90	**225**	4^{+2}_{-2}	9	**2LC0901-0CA**	66
490	2600		**55**	110	555	397	**95**	155	100	**250**	5^{+3}_{-2}	11	**2LC0901-1CA**	105
		>55	**75**	140										
		>75	**100**	170										
565	2300		**110**	170	630	430	**105**	170	110	**280**	5^{+3}_{-2}	5	**2LC0901-2CA**	134
655	2000		**130**	210	736	515	**140**	210	140	**350**	5^{+3}_{-2}	0	**2LC0901-3CA**	217
755	1800		**150**	240	840	584	**150**	230	160	**400**	5^{+3}_{-2}	0	**2LC0901-4CA**	307
887	1500		**150**	275	990	665	**160**	260	180	**440**	8^{+2}_{-3}	0	**2LC0901-5CA**	491

Configurable variants [1]

- ØD1 Without finished bore
  With finished bore
- Delivery without oil filling
  Delivery with oil filling with specification of oil filling quantity in l
  Delivery without oil filling with oil filling quantity specification in l

Notes

- The specified coupling weights are effective for maximum bores without oil filling.
- Delivery with oil filling only above -20 °C

[1] To identify complete item numbers specifying the available finish boring options and – if necessary – further order options, please use our configurators on **flender.com**.

↗ For online configuration on **flender.com**, click on the item no.

Ordering example

- Motor 350 kW, P_{eff} = 315 kW, n_1 = 1470 rpm
- FLUDEX FGD coupling size 655, standard type
- Hollow shaft: Bore ØD2 = 120H7 mm with keyway to DIN 6885/1 and retaining screw
- Part 2: without finished bore (bore ØD1 = 110 mm or ØD1 = 130 mm) or with finished bore (bore ØD1 = 140H7 mm) with keyway to DIN 6885/1 and set screw
- Delivery without oil filling, no oil filling quantity specification

Article no. without finished bore for ØD1 = 110 mm:
2LC0901-3CA19-0AA0-Z L1S

Article no. without finished bore for ØD1 = 130 mm:
2LC0901-3CA29-0AA0-Z L1S

Article no. with finished bore for ØD1 = 140H7 mm:
2LC0901-3CA99-0AA0-Z L1S+M1V

TYPE FGE

with N-EUPEX E add-on coupling

Enables larger bores on the drive side.

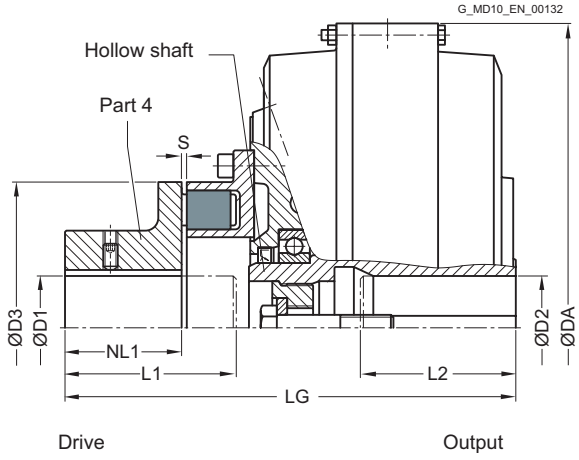

Size	Maximum speed	FLUDEX coupling					N-EUPEX E add-on coupling					↗ Article no. [1]	Weight
	n_{Kmax}	D2 Keyway DIN 6885		L2	DA	LG	D1	L1	NL1	Size D3	S		*m*
		min.	max.	max.			max.	max.					
	rpm	mm	mm	mm	mm	mm	mm	mm	mm	mm	mm		kg
370	3600		**75**	140	420	298	**75**	110	70	**180**	4^{+2}_{-2}	**2LC0900-8CB**	44
425	3000		**80**	140	470	348	**90**	140	90	**225**	4^{+2}_{-2}	**2LC0901-0CB**	64
490	2600		**55**	110	555	397	**100**	155	100	**250**	5^{+3}_{-2}	**2LC0901-1CB**	101
		>55	**75**	140									
		>75	**100**	170									
565	2300		**110**	170	630	430	**110**	170	110	**280**	5^{+3}_{-2}	**2LC0901-2CB**	129

13

Configurable variants [1]

- ØD1 Without finished bore
  With finished bore
- Delivery without oil filling
  Delivery with oil filling with specification of oil filling quantity in l
  Delivery without oil filling with oil filling quantity specification in l

Notes

- The specified coupling weights are effective for maximum bores without oil filling.
- Delivery with oil filling only above -20 °C

Ordering example

- Motor 160 kW, P_{eff} = 145 kW, n_1 = 1485 rpm
- FLUDEX FGE coupling size 490, vertical version, motor overhead
- Hollow shaft: Bore ØD2 = 60H7 with keyway to DIN 6885/1 and retaining screw
- Part 4: Bore ØD2 = 80H7 with keyway to DIN 6885/1 and set screw
- with seal set FPM
- Delivery with oil filling with specification of oil filling quantity

Article no.: 2LC0901-1CB99-0AA0-Z L1J+M1E+F08+F13+F16+Y90
Plain text to Y90: 15.4 l

[1] To identify complete item numbers specifying the available finish boring options and – if necessary – further order options, please use our configurators on **flender.com**.

↗ For online configuration on **flender.com**, click on the item no.

TYPE FGM

with N-EUPEX M add-on coupling

Enables a short fitting length.

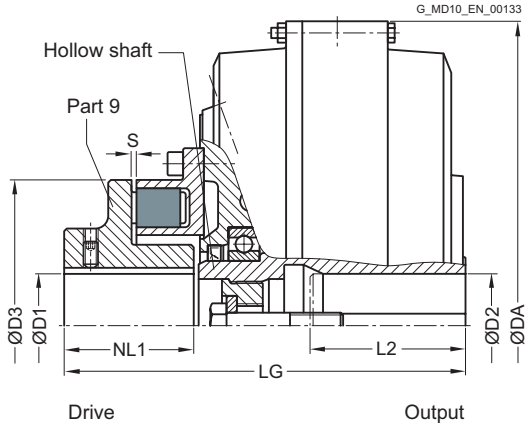

Size	Maximum speed n_{Kmax} rpm	FLUDEX coupling D2 Keyway DIN 6885 min. mm	max. mm	L2 max. mm	DA mm	LG mm	N-EUPEX M add-on coupling D1 max. mm	L1 max. mm	NL1 mm	Size D3 mm	S mm	↗ Article no. [1]	Weight m kg
370	3600		**75**	140	420	274	**70**	80	80	**180**	4^{+2}_{-2}	**2LC0900-8CD**	44
425	3000		**80**	140	470	310	**85**	100	100	**225**	4^{+2}_{-2}	**2LC0901-0CD**	64
490	2600		**55**	110	555	350	**90**	105	105	**250**	5^{+3}_{-2}	**2LC0901-1CD**	101
		>55	**75**	140									
		>75	**100**	170									
565	2300		**110**	170	630	380	**100**	120	120	**280**	5^{+3}_{-2}	**2LC0901-2CD**	128

Configurable variants [1]

- ØD1 Without finished bore
  With finished bore
- Delivery without oil filling
  Delivery with oil filling with specification of oil filling quantity in l
  Delivery without oil filling with oil filling quantity specification in l

Notes

- The specified coupling weights are effective for maximum bores without oil filling.
- Delivery with oil filling only above -20 °C

Ordering example

- Motor 45 kW, P_{eff} = 37 kW, n_1 = 1470 rpm
- FLUDEX FGM coupling size 370
- Hollow shaft: Bore ØD2 = 60H7 mm with keyway to DIN 6885/1 and retaining screw
- Part 4: Bore ØD1 = 60H7 mm with keyway to DIN 6885/1 and set screw.
- Delivery without oil filling, no oil filling quantity specification

Article no. with a keyway: 2LC0900-8CD99-0AA0-Z L1E+M1E

[1] To identify complete item numbers specifying the available finish boring options and – if necessary – further order options, please use our configurators on **flender.com**.

↗ For online configuration on **flender.com**, click on the item no.

OIL FILLING QUANTITIES FOR FG SERIES

This assignment is valid for a maximum starting torque $T_{max} = 2.0 \cdot T_{eff}$ and mineral oils with a viscosity of VG 22/VG 32.

If other operating fluids are used, or with drive via the hollow shaft or $T_{max} \neq 2.0 \cdot T_{eff}$ or $T_{max} \neq 1.5 \cdot T_{eff}$, changed filling quantities must be observed!

Sizes 370, 490, 655 and 887

P_{eff}	Speed in rpm										Size
	600	740	890	980	1180	1470	1770	2300	2950	3550	
kW	Oil filling quantity in l										
1.1	5.2										
2.2	6.4										
3	7	5.9									
4	7.2	6.4	5.4								
5.5	13	6.9	6	5.4							
7.5	14.4	7.2	6.5	6	5.1						
11	15.9	13.3	7.2	6.7	5.7						
15	17	14.7	12.4	7.2	6.2						
18	28.9	15.4	13.1	12	6.5	5.4					
22	31.1	16.2	14	12.7	6.9	5.7	4.7				
30	35.9	17	15.2	14.1	11.8	6.3	5.3				
37	37.9	29.9	16.1	14.9	12.6	6.6	5.7				
45	39.7	32.3	17	15.7	13.4	7	6				
55	40	35.5	28.4	16.6	14.3	11.6	6.4	5			
75	70.5	38.7	31.7	28.5	15.5	12.7	6.9	5.5	4.3		
90	74.7	40	34.4	30.4	16.3	13.5	11.4	5.9	4.6		
110	81	40	37	33	27.3	14.4	12.1	6.2	4.9	4	370
132	88.2	69.3	38.8	36	28.6	15.1	12.8	6.5	5.2	4.4	
160	93.5	73.3	40	37.8	30.6	15.9	13.6	10.6	5.5	4.7	
200	98	79.8	67	39.9	33.7	26.9	14.6	11.4	6	5	
250	98	88.7	70.9	40	36.8	28.4	15.4	12.2		5.4	
315		94.7	76.6	69.8	39	30.8	26.2	13.1			490
350		97.2	80	71.8	39.9	32.2	26.9	13.6			
400		98	85.1	75.2	64.5	34.2	27.8				655
500			92.4	82.5	68.1	37.1	29.7				
600			96.9	90.1	71.5	38.8	31.9				
750			98	95.3	77.3	64	35.4				
900				98	83.7	67					887
1100					91.1	70.4					
1300					95.2	74.2					
1600						80.6					

Sizes 425, 565 and 755										
P_{eff}	Speed in rpm									Size
	600	740	890	980	1180	1470	1770	2300	2950	
kW	Oil filling quantity in l									
2.2	7.8									
3	8.7									
4	9.5	7.8								
5.5	10.3	8.7								
7.5	10.9	9.5	7.9							
11	19.9	10.5	9.1	8.2						
15	22	10.9	9.8	9.1						
18	23.2	19.1	10.3	9.6	8					
22	24.3	20.3	10.9	10.1	8.6					
30	40.2	22.4	18.9	10.9	9.5					
37	42.6	23.7	20.1	18.5	10	8.2				
45	45.8	24.9	21.5	19.5	10.5	8.8				
55	50.1	25.5	22.8	20.8	17.5	9.3	7.8			
75	55.6	43.8	24.6	22.9	19.3	10.1	8.6			
90	58.1	47.1	25.5	23.9	20.4	10.7	9.2	7.2		
110		51.7	41.5	25.5	21.8	17.7	9.7	7.6		
132		54.7	44	40.3	23	18.7	10.1	8.1	6.3	
160		57.4	47.5	42.5	24	19.8	16.7	8.6	6.8	
200		59	52.9	46.2	25.5	21.4	17.9	9.2	7.3	425
250			56	51.2	41.2	22.8	19.2	14.6	7.8	
315			59	55.1	44.4	24.2	20.6	16.1	8.3	
350				56.6	46.2	38	21.4	16.7		
400				58.4	49	39.3	22.2	17.4		565
500					53.7	41.6	36.3	18.7		
600					56.4	44.1	37.9			
750						48.4	40			755
900						52.8	42			
1100							45			

TYPE FVO

Delay chamber coupling of the FV series with connecting flange.

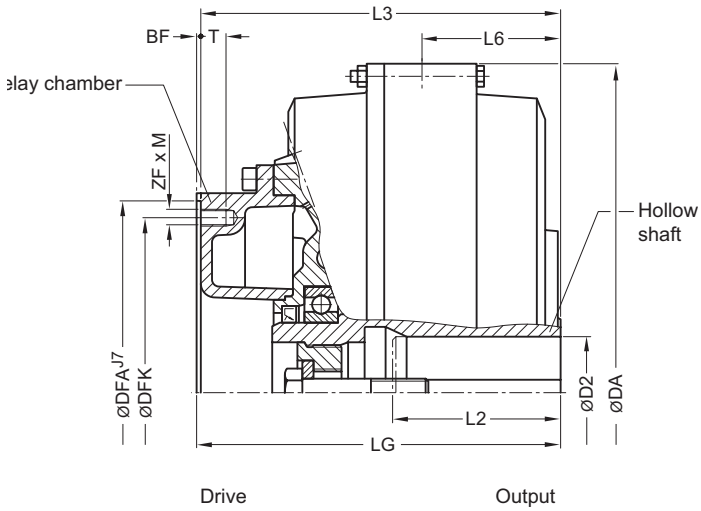

Size	Maximum speed	Installation dimensions							Flange connection dimensions					Tightening torque for screws in thread ZF · M	↗ Article no. [1]	Weight
	n_{Kmax}	D2 Keyway DIN 6885 min.	max.	L2 max.	DA	L3	L6	LG	DFA	BF	DFK	ZF · M	T	T_A		m
	rpm	mm	mm	mm	mm	mm	mm	mm	mm	mm	mm		mm	Nm		kg
370	3600		**75**	140	420	225	84	228	220	3	200	8 · M10	15	31	**2LC0900-8ED09-0AA0**	37
425	3000		**80**	140	470	257	99	260	274	3	250	8 · M12	18	54	**2LC0901-0ED09-0AA0**	47
490	2600	>55	**55**	110	555	297	105	301	314	4	282	8 · M16	24	135	**2LC0901-1ED09-0AA0**	80
		>75	**75**	140												
			100	170												
565	2300		**110**	170	630	333	123	337	344	4	312	8 · M16	24	135	**2LC0901-2ED09-0AA0**	103
655	2000		**130**	210	736	384	145	389	430	5	390	8 · M20	25	260	**2LC0901-3ED09-0AA0**	154
755	1800		**150**	240	840	440	176	445	480	5	440	10 · M20	25	260	**2LC0901-4ED09-0AA0**	224
887	1500		**150**	275	990	493	217	498	520	5	480	10 · M20	25	260	**2LC0901-5ED09-0AA0**	385

13

Configurable variants [1]

- Delivery without oil filling
  Delivery with oil filling with specification of oil filling quantity in l
  Delivery without oil filling with oil filling quantity specification in l

Notes

- The specified coupling weights are effective for maximum bores without oil filling.
- Delivery with oil filling only above -20 °C

Ordering example

- Motor 132 kW, P_{eff} = 110 kW, n_1 = 1470 rpm
- FLUDEX FVO coupling size 490
- Hollow shaft: Bore ØD2 = 70H7 mm with keyway to DIN 6885/1 and retaining screw
- Delivery with oil filling: 15.2 l **(see Page 13/9)**

Article no.: 2LC0901-1ED09-0AA0-Z L1G+F16+Y90
Plain text to Y90: 15.2 l

[1] To identify complete item numbers specifying the available finish boring options and – if necessary – further order options, please use our configurators on **flender.com**.

↗ For online configuration on **flender.com**, click on the item no.

TYPE FVD

with N-EUPEX D add-on coupling

Enables change of flexible elements without axial displacement of the shafts if the space "A" is provided.

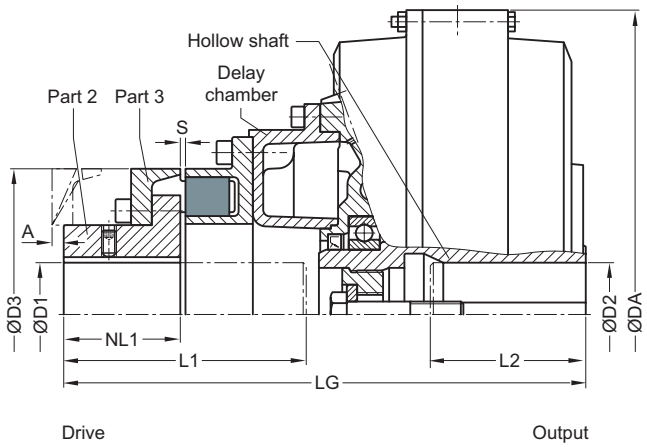

Size	Maximum speed n_{Kmax} rpm	FLUDEX coupling D2 Keyway DIN 6885 min. mm	max. mm	L2 max. mm	DA mm	LG mm	N-EUPEX D add-on coupling D1 max. mm	L1 max. mm	NL1 mm	Size D3 mm	S mm	A mm	↗ Article no. [1]	Weight m kg
370	3600		**75**	140	420	341	**65**	150	70	**180**	4^{+2}_{-2}	10	**2LC0900-8EA**	47
425	3000		**80**	140	470	403	**85**	190	90	**225**	4^{+2}_{-2}	9	**2LC0901-0EA**	68
490	2600		**55**	110	555	462	**95**	220	100	**250**	5^{+3}_{-2}	11	**2LC0901-1EA**	166
		>55	**75**	140										
		>75	**100**	170										
565	2300		**110**	170	630	513	**105**	250	110	**280**	5^{+3}_{-2}	5	**2LC0901-2EA**	142
655	2000		**130**	210	736	603	**140**	295	140	**350**	5^{+3}_{-2}	0	**2LC0901-3EA**	229
755	1800		**150**	240	840	683	**150**	330	160	**400**	5^{+3}_{-2}	0	**2LC0901-4EA**	323
887	1500		**150**	275	990	767	**160**	365	180	**440**	8^{+2}_{-3}	0	**2LC0901-5EA**	514

Configurable variants [1]

- ØD1 Without finished bore
  With finished bore
- Delivery without oil filling
  Delivery with oil filling with specification of oil filling quantity in l
  Delivery without oil filling with oil filling quantity specification in l

Notes

- The specified coupling weights are effective for maximum bores without oil filling.
- Delivery with oil filling only above -20 °C

Ordering example

- Motor 630 kW, P_{eff} = 500 kW, n_1=1770 rpm
- FLUDEX FVD coupling size 655
- Hollow shaft: Bore ØD2 = 95H7 with keyway to DIN 6885/1 and retaining screw,
- Part 2: Bore ØD2 = 110H7 with keyway to DIN 6885/1 and set screw
- with seal set FPM
- Delivery without oil filling with oil filling quantity specification (see Page 13/9)

Article no.: 2LC0901-3EA99-0AA0-Z L1Q+M1M+F08+Y90
Plain text to Y90: 32.3 l

[1] To identify complete item numbers specifying the available finish boring options and – if necessary – further order options, please use our configurators on **flender.com**.

↗ For online configuration on **flender.com**, click on the item no.

TYPE FVE

with N-EUPEX E add-on coupling

Enables larger bores on the drive side.

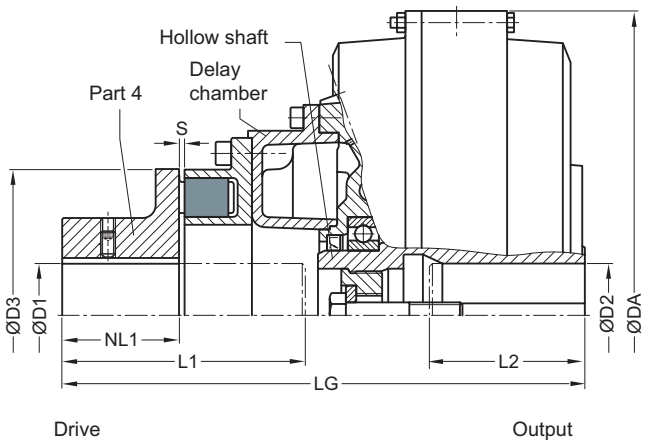

Size	Maximum speed n_{Kmax} rpm	FLUDEX coupling D2 Keyway DIN 6885 min. mm	max. mm	L2 max. mm	DA mm	LG mm	N-EUPEX E add-on coupling D1 max. mm	L1 max. mm	NL1 mm	Size D3 mm	S mm	↗ Article no. [1]	Weight m kg
370	3600		**75**	140	420	341	**75**	150	70	**180**	4^{+2}_{-2}	**2LC0900-8EB**	47
425	3000		**80**	140	470	403	**90**	190	90	**225**	4^{+2}_{-2}	**2LC0901-0EB**	66
490	2600		**55**	110	555	462	**100**	220	100	**250**	5^{+3}_{-2}	**2LC0901-1EB**	107
		>55	**75**	140									
		>75	**100**	170									
565	2300		**110**	170	630	513	**110**	250	110	**280**	5^{+3}_{-2}	**2LC0901-2EB**	137

13

Configurable variants [1]

- ØD1 Without finished bore
  With finished bore
- Delivery without oil filling
  Delivery with oil filling with specification of oil filling quantity in l
  Delivery without oil filling with oil filling quantity specification in l

Notes

- The specified coupling weights are effective for maximum bores without oil filling.
- Delivery with oil filling only above -20 °C

Ordering example

- Motor 45 kW, P_{eff} = 37 kW, n_1 = 1470 rpm
- FLUDEX FVE coupling size 370
- Hollow shaft: Bore ØD2 = 60H7 mm with keyway to DIN 6885/1 and retaining screw
- Part 4: Bore ØD1 = 60H7 mm with keyway to DIN 6885/1 and set screw
- with electronic or mechanical operation monitoring, seal set NBR
- Delivery without oil filling, no oil filling quantity specification

Article no, with 110 °C thermal switch:
2LC0900-8EB99-0AA0-Z L1E+M1E+F03

Article no. with 125 °C EOC transmitter:
2LC0900-8EB99-0AA0-Z L1E+M1E+F04

[1] To identify complete item numbers specifying the available finish boring options and – if necessary – further order options, please use our configurators on **flender.com**.

↗ For online configuration on **flender.com**, click on the item no.

TYPE FVM

with N-EUPEX M add-on coupling

Enables a short fitting length.

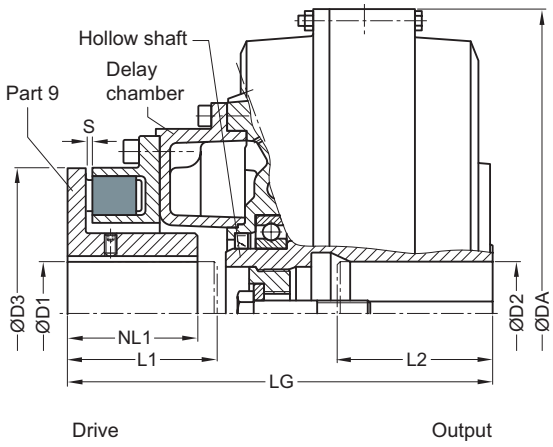

Size	Maximum speed n_{Kmax} rpm	FLUDEX coupling D2 Keyway DIN 6885 min. mm	max. mm	L2 max. mm	DA mm	LG mm	N-EUPEX M add-on coupling D1 max. mm	L1 max. mm	NL1 mm	Size D3 mm	S mm	↗ Article no. [1]	Weight m kg
370	3600		**75**	140	420	288	**70**	100	85	**180**	4^{+2}_{-2}	**2LC0900-8EC**	46
425	3000		**80**	140	470	327	**85**	115	100	**225**	4^{+2}_{-2}	**2LC0901-0EC**	65
490	2600		**55**	110	555	382	**90**	140	110	**250**	5^{+3}_{-2}	**2LC0901-1EC**	104
		>55	**75**	140									
		>75	**100**	170									
565	2300		**110**	170	630	425	**100**	165	130	**280**	5^{+3}_{-2}	**2LC0901-2EC**	135

13

Configurable variants [1]

- ØD1 Without finished bore
  With finished bore
- Delivery without oil filling
  Delivery with oil filling with specification of oil filling quantity in l
  Delivery without oil filling with oil filling quantity specification in l

Notes

- The specified coupling weights are effective for maximum bores without oil filling.
- Delivery with oil filling only above -20 °C

Ordering example

- Motor 250 kW, P_{eff} = 180 kW, n_1 = 1470 rpm
- FLUDEX FVM coupling size 565
- Hollow shaft: Bore ØD2 = 75H7 with keyway to DIN 6885/1 and retaining screw
- Part 9: Bore ØD2 = 95H7 with keyway to DIN 6885/1 and set screw
- with seal set NBR
- thermal control unit for temperature monitoring
- Delivery without oil filling without oil filling quantity specification

Article no.: 2LC0901-2EC99-0AA0-Z L1M+M1H+F03+F25

[1] To identify complete item numbers specifying the available finish boring options and – if necessary – further order options, please use our configurators on **flender.com**.

↗ For online configuration on **flender.com**, click on the item no.

OIL FILLING QUANTITIES FOR FV SERIES

This assignment is valid for a maximum starting torque $T_{max} = 1.5 \cdot T_{eff}$ and mineral oils with a viscosity of VG 22/VG 32.

If other operating fluids are used, or with drive via the hollow shaft or $T_{max} \neq 2.0 \cdot T_{eff}$ or $T_{max} \neq 1.5 \cdot T_{eff}$, changed filling quantities must be observed!

Sizes 370, 490, 655 and 887

P_{eff}	Speed in rpm										Size
	600	740	890	980	1180	1470	1770	2300	2950	3550	
kW	Oil filling quantity in l										
1.1	5.3										
2.2	6.7	5.5									
3	7.4	6.1	5								
4	8	6.6	5.6	5							
5.5	13.8	7.4	6.2	5.6							
7.5	15.2	8	6.8	6.2	5.1						
11	17.4	14.1	7.7	7.1	5.9						
15	18.5	15.6	13	7.7	6.5	5.2					
18	31.6	16.6	13.8	12.5	6.9	5.5					
22	33.2	17.7	14.8	13.4	7.3	5.9	4.8				
30	36.5	18.5	16.3	14.9	12.3	6.5	5.5				
37	39.9	32.4	17.5	15.9	13.3	7	5.9	4.2			
45	44	34	18.5	17	14.1	7.5	6.2	4.6			
55	44	36.2	31	18.1	15.1	12	6.7	5.1			
75	75.8	41.4	33.6	31.2	16.7	13.5	7.4	5.7	4.2		
90	80	44	35.4	32.7	17.7	14.3	11.6	6.1	4.5		
110	74.3	44	38.2	34.5	29.9	15.2	12.6	6.4	5	4.1	370
132	89.2	74.6	41.6	36.7	31.3	16.2	13.5	6.9	5.4	4.2	
160	96.3	78.7	44	39.8	32.9	17.3	14.4	10.4	5.7	4.6	
200	107	83.6	72.1	44	34.9	29.4	15.4	11.7	6.2	5.1	
250	107	89.5	76.3	44	37.9	31.1	16.7	12.8		5.5	
315		98.5	81.5	75.6	42.1	33	28.6	13.9			490
350		103.6	83.7	77.7	44	33.9	29.5	14.4			
400		107	86.9	80.5	68.4	35.3	30.4				655
500			94.5	85.3	73.8	38.4	32.3				
600			102.9	90.6	77.3	41.8	33.8				
750			107	99.6	81.9	67.8	36.2				
900				107	86	72.7					887
1100					92.3	76.2					
1300					99.3	79.8					
1600						84					

Sizes 425, 565 and 755

P_{eff} kW	Speed in rpm 600	740	890	980	1180	1470	1770	2300	2950	Size
	Oil filling quantity in l									
2.2	8									
3	9.1									
4	9.9	8.1								
5.5	11.1	9								
7.5	12	9.9	8.3	7.4						
11	21.4	11.3	9.4	8.6						
15	23.7	12	10.4	9.5	7.8					
18	25.2	20.5	11.1	10.1	8.4					
22	27	21.9	11.7	10.8	9					
30	43.2	24.2	20.1	11.8	9.9	7.9				
37	45.7	26	21.7	19.5	10.7	8.6	6.7			
45	48.3	27.7	23.1	21	11.3	9.2	7.5			
55	51.2	28	24.6	22.5	18.3	9.7	8.1			
75	58	46.8	27.4	24.8	20.7	10.8	9	6.5		
90	63.7	49.2	28	26.5	22	11.4	9.5	7.1		
110		52.3	44.5	28	23.4	18.7	10.2	7.8		
132		56.3	46.9	43.3	24.9	19.9	10.9	8.4	6.1	425
160		61.9	49.5	45.6	26.7	21.4	16.8	8.9	6.6	
200		65	53.2	48.6	41.7	23	18.9	9.6	7.3	
250			58.6	51.9	44.2	24.7	20.6	14.7	8	
315			65	57	47.3	26.8	22.3	16.1	8.7	
350				60	48.6	40.3	23	16.8		565
400				64.4	50.5	42.2	24	18.1		
500					54.7	44.6	37.9	19.9		
600					59.5	47.1	40	21.2		
750						50	42.9			755
900						53.2	45			
1100							47.7			

TYPE FNO

with large delay chamber and connecting shaft

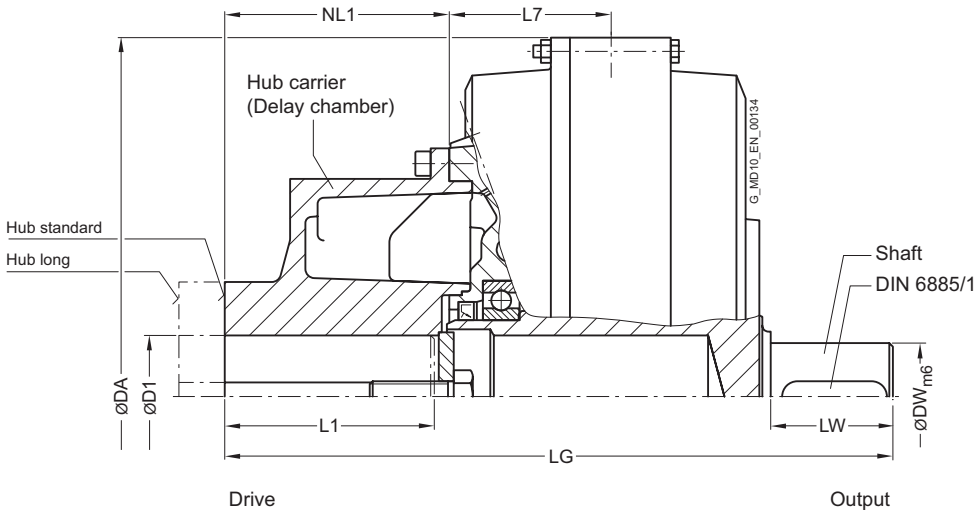

Size	Maximum speed n_{Kmax} rpm	Hub carrier Hub	Installation dimensions D1 Keyway DIN 6885 min. mm	max. mm	L1 max. mm	NL1 mm	DA mm	L7 mm	LG mm	Connection dimensions DW mm	LW mm	↗ Article no. [1]	Weight m kg
370	3600	Standard	38	**55**	110	115	420	101	380	60	70	**2LC0900-8GA**	56
		Long	38	**80**	140	145	420		410			**2LC0900-8GA**	55
425	3000	Standard	42	**75**	140	147	470	106	437	70	80	**2LC0901-0GA**	77
		Long	42	**100**	170	177	470		467			**2LC0901-0GA**	77
490	2600	Standard	48	**75**	140	148	555	131	485	70	90	**2LC0901-1GA**	116
		Long	48	**110**	170	178	555		515			**2LC0901-1GA**	116
565	2300	Standard	65	**95**	170	178	630	131	543	90	100	**2LC0901-2GA**	158
		Long	65	**120**	210	218	630		583			**2LC0901-2GA**	160
655	2000	Standard	65	**110**	210	218	736	156	644	100	125	**2LC0901-3GA**	240
		Long	65	**135**	250	258	736		684			**2LC0901-3GA**	240
755	1800	Standard	65	**120**	210	219	840	170	705	110	140	**2LC0901-4GA**	321
		Long	65	**150**	250	259	840		745			**2LC0901-4GA**	318
887	1500	Standard	65	**150**	250	251	990	187	835	120	178	**2LC0901-5GA**	562
		Long	65	**170**	300	301	990		885			**2LC0901-5GA**	563

Configurable variants [1]

- ØD1 Without finished bore
  With finished bore
- Delivery without oil filling
  Delivery with oil filling with specification of oil filling quantity in l
  Delivery without oil filling with oil filling quantity specification in l

Notes

- The specified coupling weights are effective for maximum bores without oil filling.
- Delivery with oil filling only above -20 °C
- For mass moments of inertia, centroidal distance Y and weight FY, see **Page 13/18**.

Ordering example

- Motor 110 kW, P_{eff} = 90 kW, n_1 = 1470 rpm, maximum output torque $T_{max} = 1.3 \cdot T_{eff}$
- FLUDEX FNO coupling size 425
- Hub carrier: Standard hub bore ØD1 = 75H7 mm with keyway to DIN 6885/1 and retaining screw
- Seal set FPM
- Specification of oil filling quantity: 12.4 l **(see Page 13/9)**

Article no. with 160 °C fuse:
2LC0901-1GA90-1AA0-Z L1H+Y90+F08
Plain text to Y90: 12.4 l

[1] To identify complete item numbers specifying the available finish boring options and – if necessary – further order options, please use our configurators on **flender.com**.

↗ For online configuration on **flender.com**, click on the item no.

TYPE FNA

with large delay chamber and N-EUPEX A add-on coupling

Enables a short fitting length.

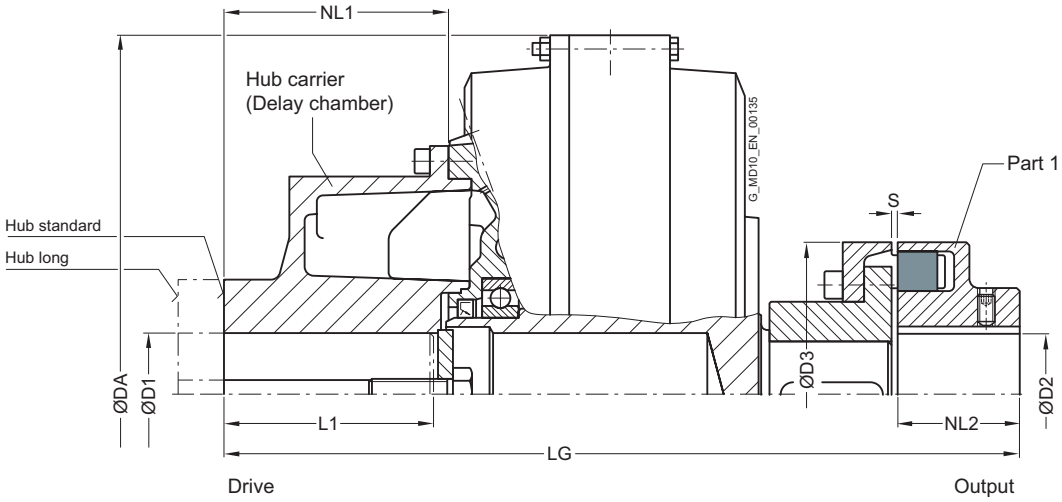

Size	Maximum speed n_{Kmax} rpm	Hub carrier Hub	FLUDEX coupling D1 Keyway DIN 6885 min. mm	max. mm	L1 max. mm	NL1 mm	DA mm	LG mm	N-EUPEX A add-on coupling D2 max. mm	NL2 mm	Size D3 mm	S mm	↗ Article no. [1]	Weight m kg
370	3600	Standard	38	**55**	110	115	420	454	**75**	70	**180**	4^{+2}_{-2}	**2LC0900-8GB**	68
		Long	38	**80**	140	145	420	484					**2LC0900-8GB**	67
425	3000	Standard	42	**75**	140	147	470	521	**85**	80	**200**	4^{+2}_{-2}	**2LC0901-0GB**	93
		Long	42	**100**	170	177	470	551					**2LC0901-0GB**	93
490	2600	Standard	48	**75**	140	148	555	579	**90**	90	**225**	4^{+2}_{-2}	**2LC0901-1GB**	143
		Long	48	**110**	170	178	555	609					**2LC0901-1GB**	143
565	2300	Standard	65	**95**	170	178	630	648	**100**	100	**250**	5^{+3}_{-2}	**2LC0901-2GB**	193
		Long	65	**120**	210	218	630	688					**2LC0901-2GB**	195
655	2000	Standard	65	**110**	210	218	736	774	**120**	125	**315**	5^{+3}_{-2}	**2LC0901-3GB**	311
		Long	65	**135**	250	258	736	814					**2LC0901-3GB**	311
755	1800	Standard	65	**120**	210	219	840	850	**140**	140	**350**	5^{+3}_{-2}	**2LC0901-4GB**	420
		Long	65	**150**	250	259	840	890					**2LC0901-4GB**	417
887	1500	Standard	65	**150**	250	251	990	1023	**160**	180	**440**	8^{+2}_{-3}	**2LC0901-5GB**	726
		Long	65	**170**	300	301	990	1073					**2LC0901-5GB**	727

Configurable variants [1]

- ØD1 Without finished bore
  With finished bore
- ØD2 Without finished bore
  With finished bore
- Delivery without oil filling
  Delivery with oil filling with specification of oil filling quantity in l
  Delivery without oil filling with oil filling quantity specification in l

Notes

- The specified coupling weights are effective for maximum bores without oil filling.
- Delivery with oil filling only above -20 °C
- For mass moments of inertia, centroidal distance Y and weight FY, see **Page 13/18**.

Ordering example

- Motor 750 kW, P_{eff} = 600 kW, n_1 = 980 rpm
- FLUDEX FNA coupling size 887
- Hub carrier: Standard hub bore ØD1 = 40H7 with keyway to DIN 6885/1 and retaining screw
- Part 1: Bore ØD2 = 120H7 with keyway to DIN 6885/1 and set screw
- with seal set FPM
- EOC system for temperature monitoring
- Delivery without oil filling with oil filling quantity specification

Article no. with EOC system:

2LC0901-5GB99-1AA0-Z L1V+M1S+F12+F26+Y90
Plain text Y90: 90.6 l

[1] To identify complete item numbers specifying the available finish boring options and – if necessary – further order options, please use our configurators on **flender.com**.

↗ For online configuration on **flender.com**, click on the item no.

TYPE FND

with large delay chamber and N-EUPEX D add-on coupling

Enables fitting and dismounting of the coupling without displacement of the coupled shafts.

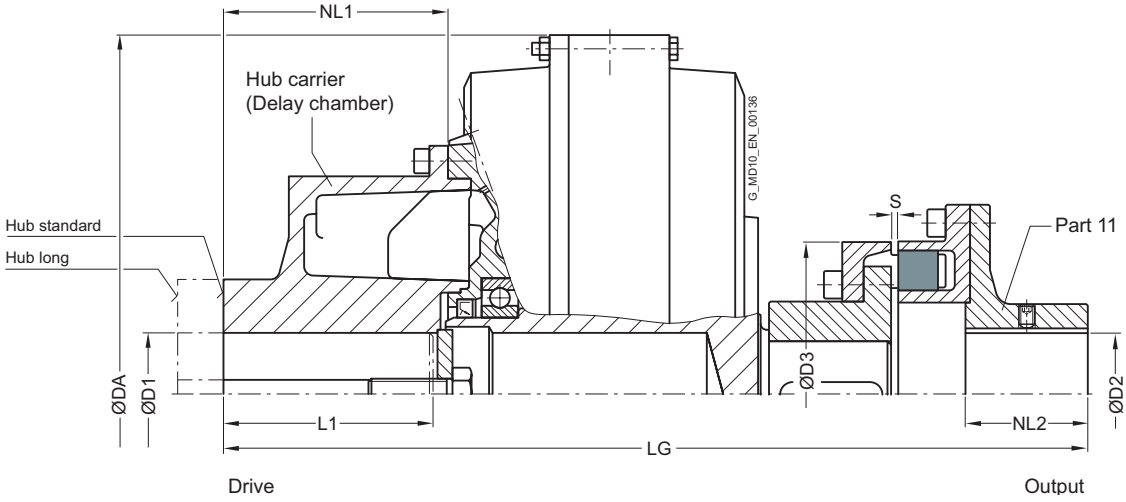

Size	Maximum speed n_{Kmax} rpm	Hub carrier Hub	FLUDEX coupling D1 Keyway DIN 6885 min. mm	D1 max. mm	L1 max. mm	NL1 mm	DA mm	LG mm	N-EUPEX D coupling D2 max. mm	NL2 mm	Size D3 mm	S mm	↗ Article no. [1]	Weight m kg
370	3600	Standard	38	**55**	110	115	420	494	**70**	70	**180**	5^{+1}_{-1}	**2LC0900-8GC**	72
		Long	38	**80**	140	145	420	524					**2LC0900-8GC**	71
425	3000	Standard	42	**75**	140	147	470	566	**80**	80	**200**	5^{+1}_{-1}	**2LC0901-0GC**	99
		Long	42	**100**	170	177	470	596					**2LC0901-0GC**	99
490	2600	Standard	48	**75**	140	148	555	629	**90**	90	**225**	5^{+1}_{-1}	**2LC0901-1GC**	150
		Long	48	**110**	170	178	555	659					**2LC0901-1GC**	150

13

Configurable variants [1]

- ØD1 Without finished bore
  With finished bore
- ØD2 Without finished bore
  With finished bore
- Delivery without oil filling
  Delivery with oil filling with specification of oil filling quantity in l
  Delivery without oil filling with oil filling quantity specification in l

[1] To identify complete item numbers specifying the available finish boring options and – if necessary – further order options, please use our configurators on **flender.com**.

↗ For online configuration on **flender.com**, click on the item no.

Size	Maximum speed n_{Kmax} rpm	Hub carrier Hub	FLUDEX coupling D1 Keyway DIN 6885 min. mm	max. mm	L1 max. mm	NL1 mm	DA mm	LG mm	N-EUPEX D coupling D2 max. mm	NL2 mm	Size D3 mm	S mm	↗ Article no. [1]	Weight m kg
565	2300	Standard	65	**95**	170	178	630	706	**100**	100	**250**	6^{+2}_{-1}	**2LC0901-2GC**	204
		Long	65	**120**	210	218	630	746					**2LC0901-2GC**	206
655	2000	Standard	65	**110**	210	218	736	842	**110**	125	**315**	6^{+2}_{-1}	**2LC0901-3GC**	324
		Long	65	**135**	250	258	736	882					**2LC0901-3GC**	324
755	1800	Standard	65	**120**	210	219	840	921	**120**	140	**350**	6^{+2}_{-1}	**2LC0901-4GC**	440
		Long	65	**150**	250	259	840	961					**2LC0901-4GC**	437
887	1500	Standard	65	**150**	250	251	990	1104	**130**	180	**440**	8^{+2}_{-2}	**2LC0901-5GC**	747
		Long	65	**170**	300	301	990	1154					**2LC0901-5GC**	748

Configurable variants [1]

- ØD1 Without finished bore
  With finished bore
- ØD2 Without finished bore
  With finished bore
- Delivery without oil filling
  Delivery with oil filling with specification of oil filling quantity in l
  Delivery without oil filling with oil filling quantity specification in l

Notes

- The specified coupling weights are effective for maximum bores without oil filling.
- Delivery with oil filling only above -20 °C
- For mass moments of inertia, centroidal distance Y and weight FY, see **Page 13/18**.

Ordering example

- Motor 132 kW, P_{eff} = 110 kW, n_1 = 1470 rpm
- FLUDEX FND coupling size 490
- Hub carrier: Long hub bore ØD1 = 80H7 mm with keyway to DIN 6885/1 and set screw
- Part 11: Bore ØD1 = 80H7 mm with keyway to DIN 6885/1 and set screw
- with electronic or mechanical operation monitoring
- seal set NBR
- Delivery without oil filling, no oil filling quantity specification

Article no, with 110 °C thermal switch:
2LC0901-1GC99-2AA0-Z L1J+M1J+F03

Article no. with 125 °C EOC transmitter:
2LC0901-1GC99-2AA0-Z L1J+M1J+F04

[1] To identify complete item numbers specifying the available finish boring options and – if necessary – further order options, please use our configurators on **flender.com**.

↗ For online configuration on **flender.com**, click on the item no.

TYPE FNDB

with large delay chamber, N-EUPEX A add-on coupling and brake drum

Enables fitting and dismounting of the coupling without displacement of the coupled shafts.

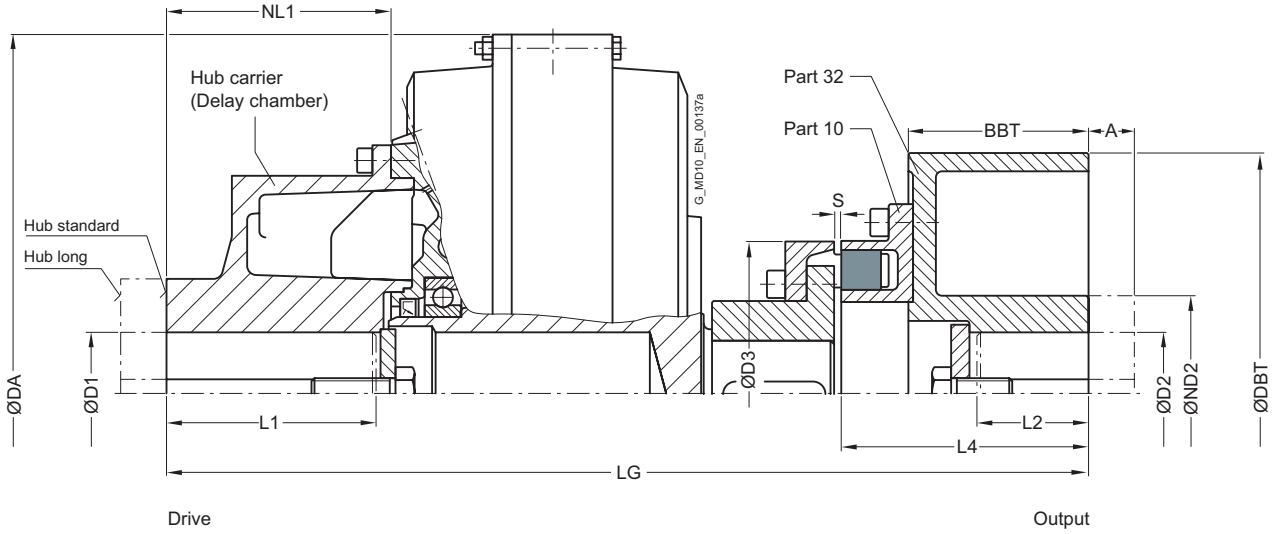

Size	Maximum speed n_{Kmax} rpm	Hub carrier Hub	FLUDEX coupling D1 Keyway DIN 6885 min. mm	max. mm	L1 max. mm	NL1 mm	DA mm	LG mm	N-EUPEX D add-on coupling Size D3 mm	S mm	L4 mm	Brake drum (Part 32) D2 max. mm	ND2 mm	DBT mm	BBT mm	A mm	↗ Article no. [1]	Weight m kg
370	3000	Standard	38	**55**	110	115	420	542	180	5^{+1}_{-1}	157	**80**	128	315	118	50	**2LC0900-8GD**	87
		Long	38	**80**	140	145	420	572									**2LC0900-8GD**	86
	2300	Standard	38	**55**	110	115	420	574			189	**90**	160	400	150	80	**2LC0900-8GD**	111
		Long	38	**80**	140	145	420	604									**2LC0900-8GD**	110
425	3000	Standard	42	**75**	140	147	470	604	200	5^{+1}_{-1}	162	**80**	128	315	118	50	**2LC0901-0GD**	113
		Long	42	**100**	170	177	470	634									**2LC0901-0GD**	113
	2300	Standard	42	**75**	140	147	470	636			194	**90**	160	400	150	80	**2LC0901-0GD**	137
		Long	42	**100**	170	177	470	666									**2LC0901-0GD**	137

Configurable variants [1]

- ØD1 Without finished bore
  With finished bore
- ØD2 Without finished bore
  With finished bore
- Part 32 Small brake drum
  Large brake drum
- Delivery without oil filling
  Delivery with oil filling with specification of oil filling quantity in l
  Delivery without oil filling with oil filling quantity specification in l

[1] To identify complete item numbers specifying the available finish boring options and – if necessary – further order options, please use our configurators on **flender.com**.

↗ For online configuration on **flender.com**, click on the item no.

Size	Maximum speed n_{Kmax} rpm	Hub carrier Hub	FLUDEX coupling D1 Keyway DIN 6885 min. mm	max. mm	L1 max. mm	NL1 mm	DA mm	LG mm	N-EUPEX D add-on coupling Size D3 mm	S mm	L4 mm	Brake drum (Part 32) D2 max. mm	ND2 mm	DBT mm	BBT mm	A mm	↗ Article no. [1]	Weight m kg
490	2300	Standard	48	**75**	140	148	555	689	225	5^{+1}_{-1}	199	**90**	160	400	150	80	**2LC0901-1GD**	183
		Long	48	**110**	170	178	555	719									**2LC0901-1GD**	183
	1900	Standard	48	**75**	140	148	555	729			239	**110**	175	500	190	110	**2LC0901-1GD**	218
		Long	48	**110**	170	178	555	759									**2LC0901-1GD**	218
565	2300	Standard	65	**95**	170	178	630	756	250	6^{+2}_{-1}	207	**100**	160	400	150	80	**2LC0901-2GD**	234
		Long	65	**120**	210	218	630	796									**2LC0901-2GD**	236
	1900	Standard	65	**95**	170	178	630	796			247	**110**	175	500	190	110	**2LC0901-2GD**	268
		Long	65	**120**	210	218	630	836									**2LC0901-2GD**	270
655	1900	Standard	65	**110**	210	218	736	907	315	6^{+2}_{-1}	257	**110**	175	500	190	110	**2LC0901-3GD**	377
		Long	65	**135**	250	258	736	947									**2LC0901-3GD**	377
	1500 [2]	Standard	65	**110**	210	218	736	953			303	**140**	224	630	236	100	**2LC0901-3GD**	437
		Long	65	**135**	250	258	736	993									**2LC0901-3GD**	437
755	1500 [2]	Standard	65	**120**	210	219	840	1018	350	6^{+2}_{-1}	307	**140**	224	630	236	100	**2LC0901-4GD**	541
		Long	65	**150**	250	259	840	1058									**2LC0901-4GD**	538
887	1300 [3]	Standard	65	**150**	250	251	990	1190	440	8^{+2}_{-2}	347	**160**	265	710	265	100	**2LC0901-5GD**	892
		Long	65	**170**	300	301	990	1240									**2LC0901-5GD**	893

Configurable variants [1]

- ØD1 Without finished bore
  With finished bore
- ØD2 Without finished bore
  With finished bore
- Part 32 Small brake drum
  Large brake drum
- Delivery without oil filling
  Delivery with oil filling with specification of oil filling quantity in l
  Delivery without oil filling with oil filling quantity specification in l

Notes

- The specified coupling weights are effective for maximum bores without oil filling, without hub prolongations "A" but with set screw
- L2 denotes the shaft insertion depth.
  In the case of shaft ends deviating from DIN 748/1 long, the insertion depth must be specified in plain text with "**Y29**"
- Delivery with oil filling only above -20 °C
- For mass moments of inertia, centroidal distance Y and weight FY, see **Page 13/18**.

Ordering example:

- Motor 55 kW, P_{eff} = 45 kW, n_1 = 1470 rpm
- FLUDEX FNDB coupling size 370, standard type
- Hub carrier: Long hub bore ØD1 = 65H7 mm
  with keyway to DIN 6885/1 and set screw
- Brake drum (Part 32): Ø315 x 118, bore ØD2 = 80H7 mm
  with keyway to DIN 6885/1 and retaining screw
- seal set NBR
- Delivery without oil filling, no oil filling quantity specification

Article no.: 2LC0900-8GD99-2AA0-Z L1F+M1J

[1] To identify complete item numbers specifying the available finish boring options and – if necessary – further order options, please use our configurators on **flender.com**.

[2] When performing a GGG brake drum:
Maximum speed 1800 min^{-1} possible.

[3] When performing a GGG brake drum:
Maximum speed 1500 min^{-1} possible.

↗ For online configuration on **flender.com**, click on the item no.

TYPE FNDS SB

with large delay chamber, N-EUPEX D add-on coupling and brake disk for stopping brakes

Enables fitting and dismounting of the coupling without displacement of the coupled shafts.

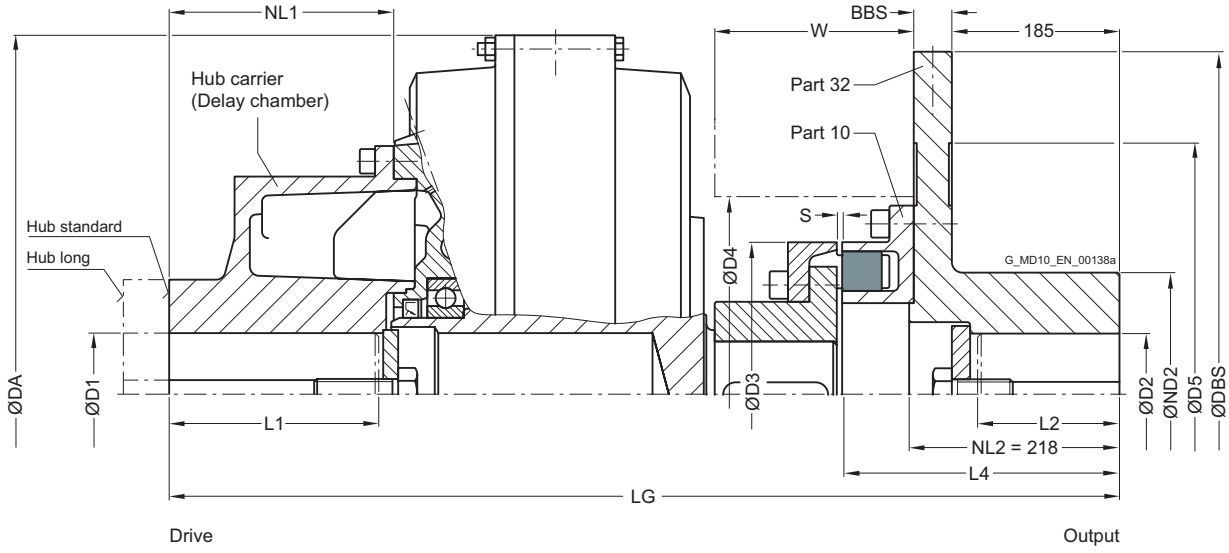

Size	Maximum speed n_{Kmax} rpm	Hub carrier Hub	FLUDEX coupling D1 Keyway DIN 6885 min. mm	max. mm	L1 max. mm	NL1 mm	DA mm	LG mm	N-EUPEX D add-on coupling Size D3 mm	S mm	L4 mm	Brake disk (part 32) [2] D2 max. mm	ND2 mm	DBS mm	BBS mm	D5 mm	Space dimensions D4 mm	W mm	↗ Article no. [1]	Weight m kg
370	3000	Standard	38	**55**	110	115	420	642	**180**	5^{+1}_{-1}	257	**80**	145	450	30	300	222	130	**2LC0900-8GE**	116
		Long	38	**80**	140	145	420	672											**2LC0900-8GE**	115
425	2600	Standard	42	**75**	140	147	470	704	**200**	5^{+1}_{-1}	262	**80**	160	500	30	340	250	144	**2LC0901-0GE**	155
		Long	42	**100**	170	177	470	734											**2LC0901-0GE**	155
490	2300	Standard	48	**75**	140	148	555	757	**225**	5^{+1}_{-1}	267	**90**	160	560	30	370	276	162	**2LC0901-1GE**	212
		Long	48	**110**	170	178	555	787											**2LC0901-1GE**	212

Configurable variants [1]

- ØD1 Without finished bore
  With finished bore
- ØD2 Without finished bore
  With finished bore
- Delivery without oil filling
  Delivery with oil filling with specification of oil filling quantity in l
  Delivery without oil filling with oil filling quantity specification in l

[1] To identify complete item numbers specifying the available finish boring options and – if necessary – further order options, please use our configurators on **flender.com**.

[2] Hub shortening possible, clearly specify NL2 size

↗ For online configuration on **flender.com**, click on the item no.

Size	Maximum speed n_{Kmax}	Hub carrier Hub	FLUDEX coupling D1 Keyway DIN 6885 min.	max.	L1 max.	NL1	DA	LG	N-EUPEX D add-on coupling Size D3	S	L4	Brake disk (part 32) [2] D2 max.	ND2	DBS	BBS	D5	Space dimensions D4	W	↗ Article no. [1]	Weight m
	rpm		mm	mm	mm	mm	mm	mm	mm	mm	mm	mm	mm	mm	mm	mm	mm	mm		kg
565	2100	Standard	65	**95**	170	178	630	824	**250**	6^{+2}_{-1}	275	**100**	175	630	30	440	317	179	**2LC0901-2GE**	279
		Long	65	**120**	210	218	630	864											**2LC0901-2GE**	281
655	2000	Standard	65	**110**	210	218	736	935	**315**	6^{+2}_{-1}	285	**100**	175	630	30	440	385	200	**2LC0901-3GE**	388
		Long	65	**135**	250	258	736	975											**2LC0901-3GE**	388
755	1800	Standard	65	**120**	210	219	840	1000	**350**	6^{+2}_{-1}	289	**140**	220	710	30	520	435	219	**2LC0901-4GE**	518
		Long	65	**150**	250	259	840	1040											**2LC0901-4GE**	515
887	1500	Standard	65	**150**	250	251	990	1144	**440**	8^{+2}_{-2}	301	**140**	220	800	30	610	525	268	**2LC0901-5GE**	828
		Long	65	**170**	300	301	990	1194											**2LC0901-5GE**	829

Configurable variants [1]

- ØD1 Without finished bore
  With finished bore
- ØD2 Without finished bore
  With finished bore
- Delivery without oil filling
  Delivery with oil filling with specification of oil filling quantity in l
  Delivery without oil filling with oil filling quantity specification in l

Notes

- The specified coupling weights are effective for maximum bores without oil filling.
- L2 denotes the shaft insertion depth
  In the case of shaft ends deviating from DIN 748/1 long the insertion depth must be specified in plain text and with "**Y29**"
- Delivery with oil filling only above -20 °C
- For mass moments of inertia, centroidal distance Y and weight FY, see **Page 13/18**.

Ordering example

- Motor 37 kW, P_{eff} = 30 kW, n_1 = 1470 rpm
- FLUDEX FNDS SB coupling size 370
- Hub carrier: Standard hub bore ØD1 = 55H7 mm
  with keyway to DIN 6885/1 and retaining screw
- Brake disk (part 32): Bore ØD2 = 75H7 mm
  with keyway to DIN 6885/1 and retaining screw
- with preservation suitable for indoor storage
- Delivery without oil filling, no oil filling quantity specification

Article no. with standard preservation:
2LC0900-8GE99-1CA0-Z L1D+M1H

Article no. with preservation 6 months:
2LC0900-8GE99-1CA0-Z L1D+M1H+B31

Article no. with preservation 24 months:
2LC0900-8GE99-1CA0-Z L1D+M1H+B28

Article no. with preservation 36 months:
2LC0900-8GE99-1CA0-Z L1D+M1H+B34

[1] To identify complete item numbers specifying the available finish boring options and – if necessary – further order options, please use our configurators on **flender.com**.

[2] Hub shortening possible, clearly specify NL2 size

↗ For online configuration on **flender.com**, click on the item no.

TYPE FNDS HB

with large delay chamber, N-EUPEX D add-on coupling and brake disk for blocking brakes

Enables fitting and dismounting of the coupling without displacement of the coupled shafts.

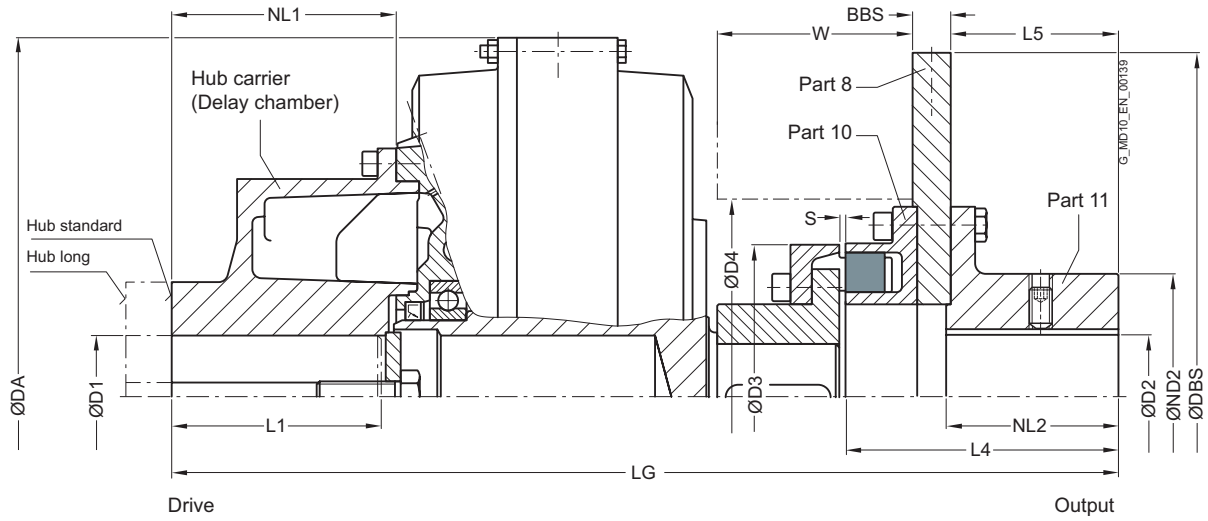

Size	Maximum speed n_{Kmax} rpm	Hub carrier Hub	FLUDEX coupling D1 Keyway DIN 6885 min. mm	D1 max. mm	L1 max. mm	NL1 mm	DA mm	LG mm	N-EUPEX D add-on coupling Size D3 mm	S mm	L4 mm	Brake disk (part 8) Hub (part 11) D2 max. mm	NL2 mm	ND2 mm	DBS mm	BBS mm	D5[2] mm	Space dimensions D4 mm	W mm	↗ Article no. [1]	Weight m kg
370	3600	Standard	38	**55**	110	115	420	555	**180**	5^{+1}_{-1}	170	**80**	118	130	355	16	115	222	127	**2LC0900-8GF**	87
		Long	38	**80**	140	145	420	585												**2LC0900-8GF**	86
425	3000	Standard	42	**75**	140	147	470	617	**200**	5^{+1}_{-1}	175	**80**	118	130	355	16	115	250	141	**2LC0901-0GF**	115
		Long	42	**100**	170	177	470	647												**2LC0901-0GF**	115
490	2600	Standard	48	**75**	140	148	555	670	**225**	5^{+1}_{-1}	180	**85**	118	135	400	16	115	276	159	**2LC0901-1GF**	166
		Long	48	**110**	170	178	555	700												**2LC0901-1GF**	166

Configurable variants [1]

- ØD1 Without finished bore
  With finished bore
- ØD2 Without finished bore
  With finished bore
- Delivery without oil filling
  Delivery with oil filling with specification of oil filling quantity in l
  Delivery without oil filling with oil filling quantity specification in l

[1] To identify complete item numbers specifying the available finish boring options and – if necessary – further order options, please use our configurators on **flender.com**.

[2] Hub shortening possible, clearly specify L5 size

↗ For online configuration on **flender.com**, click on the item no.

Size	Maximum speed	Hub carrier	FLUDEX coupling						N-EUPEX D add-on coupling			Brake disk (part 8) Hub (part 11)						Space dimensions		↗ Article no. [1]	Weight
	n_{Kmax}	Hub	D1 Keyway DIN 6885		L1	NL1	DA	LG	Size D3	S	L4	D2	NL2	ND2	DBS	BBS	D5[2]	D4	W		m
	rpm		min. mm	max. mm	max. mm	mm	mm	mm	mm	mm	mm	max. mm	mm	mm	mm	mm	mm	mm	mm		kg
565	2300	Standard	65	**95**	170	178	630	737	**250**	6^{+2}_{-1}	188	**100**	118	160	450	16	115	317	176	**2LC0901-2GF**	224
		Long	65	**120**	210	218	630	777												**2LC0901-2GF**	226
655	2000	Standard	65	**110**	210	218	736	848	**315**	6^{+2}_{-1}	198	**100**	118	170	500	16	115	385	197	**2LC0901-3GF**	347
		Long	65	**135**	250	258	736	888												**2LC0901-3GF**	347
755	1800	Standard	65	**120**	210	219	840	961	**350**	6^{+2}_{-1}	250	**140**	164	225	630	20	160	435	215	**2LC0901-4GF**	495
		Long	65	**150**	250	259	840	1001												**2LC0901-4GF**	492
887	1500	Standard	65	**150**	250	251	990	1105	**440**	8^{+2}_{-2}	262	**140**	164	225	710	20	160	525	264	**2LC0901-5GF**	799
		Long	65	**170**	300	301	990	1155												**2LC0901-5GF**	800

Configurable variants [1]

- ØD1 Without finished bore
  With finished bore
- ØD2 Without finished bore
  With finished bore
- Delivery without oil filling
  Delivery with oil filling with specification of oil filling quantity in l
  Delivery without oil filling with oil filling quantity specification in l

Notes

- The specified coupling weights are effective for maximum bores without oil filling.
- L2 denotes the shaft insertion depth
  In the case of shaft ends deviating from DIN 748/1 long the insertion depth must be specified in plain text and with "**Y29**"
- Delivery with oil filling only above -20 °C
- For mass moments of inertia, centroidal distance Y and weight FY, see **Page 13/18**.

Ordering example

- Motor 200 kW, P_{eff} = 160 kW, n_1 = 1470 rpm
- FLUDEX FNDS HB coupling size 490
- Hub carrier: Long hub bore ØD1 = 110H7 mm
  with keyway to DIN 6885/1 and set screw
- Hub (part 11): Bore ØD2 = 80H7 mm
  with keyway to DIN 6885/1 and set screw
- Fitting position: Horizontal/vertical motor underneath (MU)
- Delivery without oil filling, no oil filling quantity specification

Article no. in horizontal version:
2LC0901-1GF99-2AA0-Z L1Q+M1J

Article no. in vertical version (MU):
2LC0901-1GF99-2AA0-Z L1Q+M1J+F14

[1] To identify complete item numbers specifying the available finish boring options and – if necessary – further order options, please use our configurators on **flender.com**.

[2] Hub shortening possible, clearly specify L5 size

↗ For online configuration on **flender.com**, click on the item no.

OIL FILLING QUANTITIES FOR FN SERIES

This assignment is valid for a maximum starting torque $T_{max} = 1.3 \cdot T_{eff}$ and mineral oils with a viscosity of VG 22/VG 32.

If other operating fluids are used, or with drive via the shaft or $T_{max} \neq 1.3 \cdot T_{eff}$, changed filling quantities must be observed!

Sizes 370, 490, 655 and 887

P_{eff}	Speed in rpm										Size
	600	740	890	980	1180	1470	1770	2300	2950	3550	
kW	Oil filling quantity in l										
1.1	5.6										
2.2	7.1	5.7									
3	7.9	6.4	5.1								
4	8.2	7	5.8	5.1							
5.5	14.4	7.8	6.5	5.9							
7.5	16	8.2	7.2	6.5	5.3						
11	18.2	14.7	8.2	7.4	6.2						
15	19	16.3	13.4	8.2	6.8	5.4					
18	33.5	17.3	14.4	12.9	7.2	5.8					
22	35.4	18.6	15.4	13.9	7.8	6.2	4.9				
30	38.5	19	17	15.5	12.5	6.9	5.7				
37	41.6	34.3	18.4	16.6	13.7	7.4	6.1	4.4			
45	45	36.2	19	17.7	14.7	7.9	6.6	4.7			
55	45	38.2	32.9	19	15.8	12.2	7	5.3			
75	76.5	43	35.8	33.1	17.4	14	7.8	6	4.3		
90	80.5	45	37.6	34.8	18.7	14.9	11.7	6.4	4.6		
110	85.2	45	40.1	36.7	31.8	16	13.1	6.8	5.1		
132	89.5	74.7	43.3	38.6	33.2	16.9	14	7.2	5.6	4.3	370
160	95.6	80	45	41.5	35	18.1	15	10.7	6	4.7	370
200	105.5	84.5	71.5	45	37.1	31.1	16.2	11.8	6.5	5.2	370
250	110	89.7	76.9	45	39.7	33	17.4	13.2		5.8	370
315		97.5	82.4	76.5	43.8	35.1	30.2	14.5			490
350		102.1	84.6	78.4	45	36.1	31.2	15			490
400		108.9	87.6	81.2	68	37.4	32.3				655
500			94.1	86.1	73.3	40.2	34.2				655
600			101.4	90.6	78.1	43.5	35.9				655
750			110	98.5	82.9	66.9	38.2				655
900				107.2	86.8	72.7					887
1100					92.1	77.1					887
1300					98.2	80.4					887
1600						84.9					887

13

Sizes 425, 565 and 755

P_{eff} kW	Speed in rpm 600	740	890	980	1180	1470	1770	2300	2950	Size
	Oil filling quantity in l									
2.2	8.5									
3	9.7									
4	10.7	8.6								
5.5	12	9.7								
7.5	12.5	10.7	8.8	7.7						
11	22.6	12.2	10.2	9.2						
15	25.2	12.5	11.2	10.2	8.3					
18	26.6	21.4	12	10.8	8.9					
22	28.6	23.1	12.5	11.6	9.6					
30	44.1	25.7	21.1	12.5	10.7	8.5				
37	46.8	27.5	22.9	20.5	11.4	9.2	7.1			
45	49.5	29	24.5	22	12.3	9.8	7.8			
55	52.4	29	26.1	23.7	18.7	10.5	8.6			
75	58.5	47.8	29	26.3	21.7	11.6	9.7	6.9		
90	63.8	50.5	29	27.9	23.2	12.4	10.3	7.4		
110		53.5	45.6	29	24.9	19	11	8.3		
132		57	47.9	44.3	26.3	20.9	11.7	8.9	6.6	425
160		62	50.8	46.7	28.1	22.5	17.4	9.6	6.9	
200		67	54.2	49.9	42.1	24.3	19.5	10.3	7.6	
250			59	53.1	45.3	26.2	21.6	16	8.6	
315			66.2	57.6	48.3	28.3	23.5	16.7	9.3	
350				60.3	49.9	40.8	24.4	17.4		565
400				64.4	51.8	42.6	25.5	18.5		
500					55.4	45.7	37.8	20.8		
600					59.8	48.1	40.6	22.3		
750						51.3	43.7			755
900						54.2	46.1			
1100							48.8			
1200							50.1			

SPARE AND WEAR PARTS

for standard catalog couplings

Flexible elements for N-EUPEX add-on coupling

FLUDEX coupling			N-EUPEX coupling	Number flexibles per set	Article No. (FFA) for one set flexibles
Series	Size	Type	Size		
FA	222	FAK [1]; FAKB [1]	95	6	FFA:000001194870
		Other types	110	6	FFA:000001194871
	297	FAK [1]; FAKB [1]	125	6	FFA:000001194872
		FAK [2]; FAKB [2]	125	6	FFA:000001194873
		Other types	125	6	FFA:000001194873
	342	All types	140	6	FFA:000001194874
	395	FAD [1]; FAE [1]; FADB [1]	225	8	FFA:000001194875
		FAD [2]; FAE [2]; FADB [2]	225	8	FFA:000001194876
		Other types	225	8	FFA:000001194876
	450	FAD [1]; FAE [1]; FADB [1]	250	8	FFA:000001194877
		FAD [2]; FAE [2]; FADB [2]	250	8	FFA:000001194878
		Other types	250	8	FFA:000001194878
	516	FAD [1]; FADB [1]	315	9	FFA:000001194879
		FAD [2]; FADB [2]	315	9	FFA:000001194880
		Other types	315	9	FFA:000001194880
	590	All types until 2010	315	9	FFA:000001194879
		All types from 2011 on	315	9	FFA:000001194880
FG/FV	370	All types	180	8	FFA:000001194881
	425		225	8	FFA:000001194876
	490		250	8	FFA:000001194878
	565		280	8	FFA:000001194882
	655		350	9	FFA:000001194883
	755		400	10	FFA:000001194884
	887		440	10	FFA:000001194885
FN	370	FNDB ØDBT = 400 [3]	200	8	FFA:000001194886
		All types	180	8	FFA:000001194881
	425	All types	200	8	FFA:000001194886
	490	FNDB ØDBT = 500 [3]	250	8	FFA:000001194878
		All types	225	8	FFA:000001194876
	565	All types	250	8	FFA:000001194878
	655		315	9	FFA:000001194880
	755		350	9	FFA:000001194883
	887		440	10	FFA:000001194885

[1] For couplings up to and including year of construction 2003.

[2] For couplings from year of construction 2004.

[3] For couplings up to and including year of construction 2007.

Thermal equipment

FLUDEX size	Thread	Part no.	Fuse element	Response temperature	Marking	Article No. (FFA) for one unit
222	M10	103 + 104 [1]	Fusible safety plug	110 °C	yellow	FFA:000001194896
		203 + 204 [1]		140 °C	red	FFA:000001194897
				160 °C	green	FFA:000001194898
	M10	153 + 104 [1]	Oil filler plug	–		FFA:000001194894
297	M10	153 + 104 [1]	Oil filler plug	–		FFA:000001194894
297 - 887	M18 x 1.5	103 [2]	Fusible safety plug	110 °C	yellow	FFA:000001250338
		203 [2]		140 °C	red	FFA:000001250339
				160 °C	green	FFA:000001250380
	M18 x 1.5	110 [2]	Thermal switch	110 °C		FFA:000001361795
		210 [2]		140 °C		FFA:000001361796
	M18 x 1.5	153 [2]	Oil filler plug (except size 887)	–		FFA:000001337653
		163 [2]	Screw plug			
	–	301	Cut-out device	–		FFA:000000652020
	–	142 + 104 [1]	EOC transmitter with seal	125 °C		FFA:000001194899
	–	245	EOC sensor	–		FFA:000000361460
	–	244	Evaluation instrument EWD 20 to 250 V AC/DC	–		FFA:000001205294
370 - 755	M10	173 + 174 [1]	Oil drain plug - delay chamber	–		FFA:000001194894
887	M30 x 1.5	153 + 154 [1]	Oil filler plug (up to and including year of construction 2007)	–		FFA:000001194893
		153 [2]	Oil filler plug (from year of construction 2008)	–		FFA:000001349554
	M16	173 + 174 [1]	Oil drain plug - delay chamber	–		FFA:000001194895

Sealing and rolling bearing sets for the FA series (except type FAR)

FLUDEX size	Up to and including year of construction	From year of construction	Seal set material	Article No. (FFA) for one seal set	Article No. (FFA) for one rolling bearing set
222	2000		NBR	FFA:000001194900	FFA:000001194800
		2001	NBR	FFA:000001194901	FFA:000001194801
			FPM	FFA:000001194902	
297	2000		NBR	FFA:000001194903	FFA:000001194802
			FPM	FFA:000001194904	
		2001	NBR	FFA:000001194905	FFA:000001194803
			FPM	FFA:000001194906	
342			NBR	FFA:000001194907	FFA:000001194804
			FPM	FFA:000001194908	
395			NBR	FFA:000001194909	FFA:000001194805
			FPM	FFA:000001194910	
450			NBR	FFA:000001194911	FFA:000001194806
			FPM	FFA:000001194912	
516			NBR	FFA:000001194913	FFA:000001194807
			FPM	FFA:000001194914	
590			NBR	FFA:000001194915	FFA:000001194808
			FPM	FFA:000001194916	

[1] With separate seal ring.

[2] With built-in ring seal.

SPARE AND WEAR PARTS

for standard catalog couplings

Seal and rolling bearing sets for type FAR [1)]

FLUDEX size	Type	Up to and including year of construction	From year of construction	Seal set material	Article No. (FFA) for one seal set	Article No. (FFA) for one rolling bearing set
222	2 · SPZ 100	2000		NBR	FFA:000001194917	FFA:000001194809
			2001	NBR	FFA:000001194918	FFA:000001194810
				FPM	FFA:000001194919	
	3 · SPZ 160		2001	NBR	FFA:000001194920	FFA:000001194811
				FPM	FFA:000001194921	
297	5 · SPZ 140	2000		NBR	FFA:000001194922	FFA:000001194812
				FPM	FFA:000001194923	
	7 · SPZ 140	2000		NBR	FFA:000001194924	FFA:000001194813
				FPM	FFA:000001194925	
	5 · SPZ 150 4 · SPA 190		2001	NBR	FFA:000001194926	FFA:000001194814
				FPM	FFA:000001194927	
	5 · SPA 224		2001	NBR	FFA:000001194928	
				FPM	FFA:000001194929	
342	5 · SPA 180			NBR	FFA:000001194930	FFA:000001194815
				FPM	FFA:000001194931	
	7 · SPA 180	2000		NBR	FFA:000001194932	FFA:000001194816
				FPM	FFA:000001194933	
395	5 · SPB 224			NBR	FFA:000001194934	FFA:000001194817
				FPM	FFA:000001194935	
	7 · SPB 224	2000		NBR	FFA:000001194936	FFA:000001194818
				FPM	FFA:000001194937	
	7 · SPB 236		2001	NBR	FFA:000001194938	FFA:000001194819
				FPM	FFA:000001194939	
	7 · SPB 280		2001	NBR	FFA:000001194938	
				FPM	FFA:000001194939	
450	8 · SPB 250	2000 (ØD1 ⩽ 75)		NBR	FFA:000001194940	FFA:000001194820
				FPM	FFA:000001194941	
		ØD1 ⩽ 75	2001	NBR	FFA:000001194942	FFA:000001194821
				FPM	FFA:000001194943	
		ØD1 = 73.025 ØD1 > 75	2001	NBR	FFA:000001194944	FFA:000001194822
				FPM	FFA:000001194945	
	10 · SPB 250	2000		NBR	FFA:000001194946	FFA:000001194823
				FPM	FFA:000001194947	
516	10 · SPB 315	2000		NBR	FFA:000001194948	FFA:000001194824
				FPM	FFA:000001194949	
			2001	NBR	FFA:000001194950	FFA:000001194825
				FPM	FFA:000001194951	
	12 · SPB 315	2000		NBR	FFA:000001194952	FFA:000001194826
				FPM	FFA:000001194953	
590	12 · SPC 315	2000		NBR	FFA:000001194954	FFA:000001194827
				FPM	FFA:000001194955	
			2001	NBR	FFA:000001194956	FFA:000001194828
				FPM	FFA:000001194957	

[1)] Spare parts only suitable for specified belt pulleys.
Please request a different number of grooves by specifying the original delivery number.

Seal and rolling bearing sets for the FG/FV/FN series

FLUDEX coupling Series	Size	Year of construction	Additional bore specifications	Seal set material	Article No. (FFA) for one seal set	Article No. (FFA) for one rolling bearing set
FG	370	Up to and including year of construction 2000		NBR	FFA:000001194958	FFA:000001194850
				FPM	FFA:000001194959	
		From year of construction 2001		NBR	FFA:000001194958	FFA:000001194851
				FPM	FFA:000001194959	
	425			NBR	FFA:000001194962	FFA:000001194852
				FPM	FFA:000001194963	
	490			NBR	FFA:000001194966	FFA:000001194853
				FPM	FFA:000001194967	
	565			NBR	FFA:000001194970	FFA:000001194854
				FPM	FFA:000001194971	
	655		ØD2 ≤ 100	NBR	FFA:000001194974	FFA:000001194855
				FPM	FFA:000001194975	
			ØD2 > 100	NBR	FFA:000001194976	FFA:000001194856
				FPM	FFA:000001194977	
	755		ØD2 ≤ 110	NBR	FFA:000001194982	FFA:000001194857
				FPM	FFA:000001194983	
			ØD2 > 110	NBR	FFA:000001194984	FFA:000001194858
				FPM	FFA:000001194985	
	887			FPM	FFA:000001194993	FFA:000001194860
FV	370	Up to and including year of construction 2000		NBR	FFA:000001194960	FFA:000001194850
				FPM	FFA:000001194961	
		From year of construction 2001		NBR	FFA:000001194960	FFA:000001194851
				FPM	FFA:000001194961	
	425			NBR	FFA:000001194964	FFA:000001194852
				FPM	FFA:000001194965	
	490			NBR	FFA:000001194968	FFA:000001194853
				FPM	FFA:000001194969	
	565			NBR	FFA:000001194972	FFA:000001194854
				FPM	FFA:000001194973	
	655		ØD2 ≤ 100	NBR	FFA:000001194978	FFA:000001194855
				FPM	FFA:000001194979	
			ØD2 > 100	NBR	FFA:000001194980	FFA:000001194856
				FPM	FFA:000001194981	
	755		ØD2 ≤ 110	NBR	FFA:000001194986	FFA:000001194857
				FPM	FFA:000001194987	
			ØD2 > 110	NBR	FFA:000001194988	FFA:000001194858
				FPM	FFA:000001194989	
	887			FPM	FFA:000001194992	FFA:000001194860
FN	370	Up to and including year of construction 2000		NBR	FFA:000001194960	FFA:000001194850
				FPM	FFA:000001194961	
		From year of construction 2001		NBR	FFA:000001194960	FFA:000001194851
				FPM	FFA:000001194961	
	425			NBR	FFA:000001194964	FFA:000001194852
				FPM	FFA:000001194965	
	490			NBR	FFA:000001194968	FFA:000001194853
				FPM	FFA:000001194969	
	565			NBR	FFA:000001194972	FFA:000001194854
				FPM	FFA:000001194973	
	655			NBR	FFA:000001194978	FFA:000001194855
				FPM	FFA:000001194979	
	755			NBR	FFA:000001194990	FFA:000001194859
				FPM	FFA:000001194991	
	887			FPM	FFA:000001194992	FFA:000001194860

APPENDIX

Fits	**A/2**
Fitting recommendations	A/2
Deviation table to DIN ISO 286	A/2
Cylindrical shaft ends, extract from DIN 748 Part 1 (long)	A/3
Central holes according to DIN 332 Part 2	A/3
Parallel key connections to DIN 6885-1	**A/4**
Related catalogs	**A/6**
Suitable gear solutions	**A/9**

A

FITS

Fitting recommendations

For many applications, the fit assignment m6/H7 is especially suitable.

Description	Application	Shaft tolerance	Bore tolerance
Sliding fit with parallel key connection not suitable for reversing operation	For steel and cast hubs	j6	H7
		h6	J7
Press fit with parallel key connection not suitable for reversing operation	For steel and cast hubs	h6	K7
		k6	H7
Interference fit with parallel key connection suitable for reversing operation	For steel and cast hubs	m6	H7
		n6	H7
		h6	M7
	Only for steel hubs	h6	P7
	Preferred for ZAPEX and ARPEX coupling series.	k6	M7
		m6	K7
		n6	J7
		p6	H7
		s6	F7
Shrink fit connection without parallel key	Only for steel hubs	u6	H6
	The permitted hub tension must be urgently checked.	v6	H6
		x6	H6

Deviation table to DIN ISO 286 for above-mentioned fits for bore diameters from 10 mm to 250 mm

Bore diameter		Deviations in µm											
		Bore						Shaft					
above	up to	F7	H7	J7	K7	M7	P7	h6	j6	k6	m6	n6	p6
10	18	+34	+18	+10	+6	0	-11	0	+8	+12	+18	+23	+29
		+16	0	-8	-12	-18	-29	-11	-3	+1	+7	+12	+18
18	30	+41	+21	+12	+6	0	-14	0	+9	+15	+21	+28	+35
		+20	0	-9	-15	-21	-35	-13	-4	+2	+8	+15	+22
30	50	+50	+25	+14	+7	0	-17	0	+11	+18	+25	+33	+42
		+25	0	-11	-18	-25	-42	-16	-5	+2	+9	+17	+26
50	80	+60	+30	+18	+9	0	-21	0	+12	+21	+30	+39	+51
		+30	0	-12	-21	-30	-51	-19	-7	+2	+11	+20	+32
80	120	+71	+35	+22	+10	0	-24	0	+13	+25	+35	+45	+59
		+36	0	-13	-25	-35	-59	-22	-9	+3	+13	+23	+37
120	180	+83	+40	+26	+12	0	-28	0	+14	+28	+40	+52	+68
		+43	0	-14	-28	-40	-68	-25	-11	+3	+15	+27	+43
180	250	+96	+46	+30	+13	0	-33	0	+16	+33	+46	+60	+79
		+50	0	-16	-33	-46	-79	-29	-13	+4	+17	+31	+50

Cylindrical shaft ends, extract from DIN 748 Part 1 (long)

	Diameter in mm																					
	24	25	28	30	32	35	38	40	42	45	48	50	55	60	65	70	75	80	85	90	95	100
ISO tolerance zone	**k6**												**m6**									
End length in mm	50	60		80				110						140				170				210

Central holes according to DIN 332 Part 2

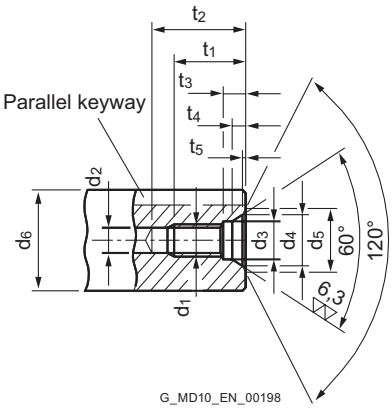

Form DS (with thread) DIN 332/2

Recommended diameter ranges d_6 [1]		DS form dimensions									
above	up to	d_1	d_2 [2]	d_3	d_4	d_5	t_1 +2	t_2 min.	t_3 +1	t_4 approx.	t_5 approx.
7	**10**	M3	2.5	3.2	5.3	5.8	9	12	2.6	1.8	0.2
10	**13**	M4	3.3	4.3	6.7	7.4	10	14	3.2	2.1	0.3
13	**16**	M5	4.2	5.3	8.1	8.8	12.5	17	4	2.4	0.3
16	**21**	M6	5	6.4	9.6	10.5	16	21	5	2.8	0.4
21	**24**	M8	6.8	8.4	12.2	13.2	19	25	6	3.3	0.4
24	**30**	M10	8.5	10.5	14.9	16.3	22	30	7.5	3.8	0.6
30	**38**	M12	10.2	13	18.1	19.8	28	37	9.5	4.4	0.7
38	**50**	M16	14	17	23	25.3	36	45	12	5.2	1.0
50	**85**	M20	17.5	21	28.4	31.3	42	53	15	6.4	1.3
85	**130**	M24	21	25	34.2	38	50	63	18	8	1.6
130	**225**	M30 [3]	26.5	31	40.2	44.6	60	77	22	8	1.9
225	**320**	M36 [3]	32	37	49.7	55	74	93	22	11	2.3
320	**500**	M42 [3]	37.5	43	60.3	66.6	84	105	26	15	2.7

[1] Diameter refers to the finished workpiece

[2] Tap hole drill diameter according to DIN 336 Part 1

[3] Dimensions not acc. to DIN 332 Part 2

PARALLEL KEY CONNECTIONS TO DIN 6885-1

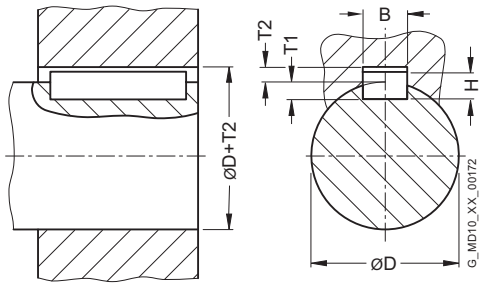

For moderate operating conditions, the hub keyway tolerance JS9 is recommended.

In harsh operating conditions or during reversing operation, the keyway width tolerance P9 must be preferred.

With two parallel keyways, the keyway width tolerance JS9 should be specified in order to simplify the assembly.

The shaft keyway width has to be specified with the tolerance N9.

Diameter		Keyway width	Parallel key height	Shaft keyway depth	Hub keyway depth	Deviation for shaft and hub keyway depth	Deviation table for keyway width B	
above D mm	up to mm	B mm	H mm	T1 mm	T2 mm	mm	JS9 µm	P9 µm
	10	3	3	1.8	1.4	+0.1	+12.5	-6
							-12.5	-31
10	12	4	4	2.5	1.8	+0.1	+15	-12
							-15	-42
12	17	5	5	3	2.3	+0.1	+15	-12
							-15	-42
17	22	6	6	3.5	2.8	+0.1	+15	-12
							-15	-42
22	30	8	7	4	3.3	+0.2	+18	-15
							-18	-51
30	38	10	8	5	3.3	+0.2	+18	-15
							-18	-51
38	44	12	8	5	3.3	+0.2	+21.5	-18
							-21.5	-61
44	50	14	9	5.5	3.8	+0.2	+21.5	-18
							-21.5	-61
50	58	16	10	6	4.3	+0.2	+21.5	-18
							-21.5	-61
58	65	18	11	7	4.4	+0.2	+21.5	-18
							-21.5	-61
65	75	20	12	7.5	4.9	+0.2	+26	-22
							-26	-74
75	85	22	14	9	5.4	+0.2	+26	-22
							-26	-74
85	95	25	14	9	5.4	+0.2	+26	-22
							-26	-74

A

Diameter		Keyway width	Parallel key height	Shaft keyway depth	Hub keyway depth	Deviation for shaft and hub keyway depth	Deviation table for keyway width B	
above D mm	up to mm	B mm	H mm	T1 mm	T2 mm	mm	JS9 µm	P9 µm
95	110	28	16	10	6.4	+0.2	+26	-22
							-26	-74
110	130	32	18	11	7.4	+0.2	+31	-26
							-31	-88
130	150	36	20	12	8.4	+0.3	+31	-26
							-31	-88
150	170	40	22	13	9.4	+0.3	+31	-26
							-31	-88
170	200	45	25	15	10.4	+0.3	+31	-26
							-31	-88
200	230	50	28	17	11.4	+0.3	+31	-26
							-31	-88
230	260	56	32	20	12.4	+0.3	+37	-32
							-37	-106
260	290	63	32	20	12.4	+0.3	+37	-32
							-37	-106
290	330	70	36	22	14.4	+0.3	+37	-32
							-37	-106
330	380	80	40	25	15.4	+0.3	+37	-32
							-37	-106
380	440	90	45	28	17.4	+0.3	+43.5	-37
							-43.5	-124
440	500	100	50	31	19.4	+0.3	+43.5	-37
							-43.5	-124

A

RELATED CATALOGS

Torsionally Rigid Couplings

FLE 10.1

FLEX-C10001-00-7600

Flexible Couplings

FLE 10.2

FLEX-C10002-00-7600

Highly Flexible Couplings

FLE 10.3

FLEX-C10003-00-7600

Fluid Couplings

FLE 10.4

FLEX-C10004-00-7600

ARPEX

High Performance Couplings
MD 10.2

PDMD-C10146-00

SIPEX and BIPEX-S

Backlash-free couplings
MD 10.3

PDMD-C10145-00

ARPEX

Composite Couplings
MD 10.5

PDMD-C10153-00

ARPEX

Safety couplings

MD 10.11

PDMD-C10147-00

A

FLENDER SIP
Standard Industrial Planetary Gear Units
MD 31.1
PDMD-C10154-00

FLENDER CHG
Helical Gear Units
MD 20.10
PDMD-C10155-00

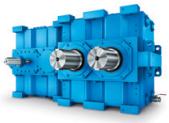

Gear units
Fast Track
MD 20.12
PDMD-C10156-00

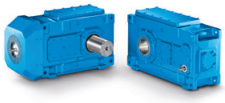

Bucket Elevator Drives
MD 20.2
PDMD-C10157-00

PLANUREX 2
Planetary Gear Units
MD 20.3
PDMD-C10158-00

Paper Machine Drives
MD 20.5
PDMD-C10159-00

Conveyor Belt Drives
MD 20.6
PDMD-C10160-00

Marine Reduction Gearboxes
MD 20.7
PDMD-C10161-00

DUORED 2
Helical Gear Units, Load-sharing
MD 20.8
PDMD-C10162-00

Pinion Drive for Tube Mills
MD 20.9
PDMD-C10163-00

A

THE RIGHT GEAR UNIT SOLUTION FOR ANY REQUIREMENT

We provide helical and planetary gear units made up of standard modules or as a complete application solution.

Helical and planetary gear units from Flender are modern drive solutions that satisfy the most varying and extreme demands, day after day and year after year. For decades, plant operators have been achieving high system reliability and low lifecycle costs in every conceivable industry with our helical gear units.

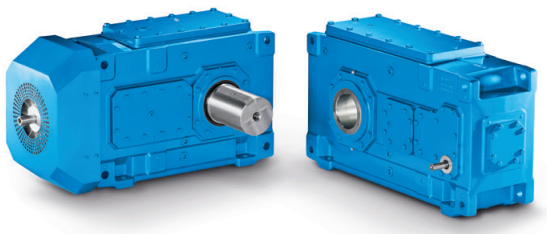

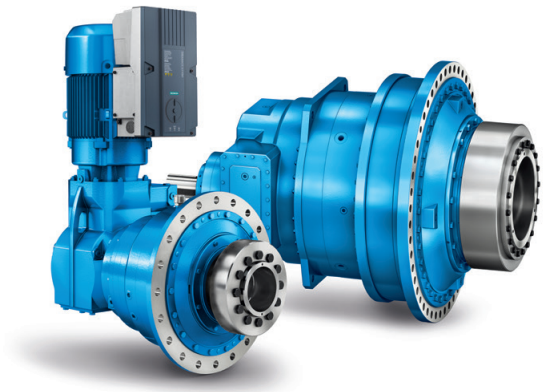

Helical and bevel helical gear units

Flender helical and bevel helical gear units are by far the most comprehensive range of industrial gear units in the world.
It ranges from a multi-faceted universal gear unit portfolio and application-specific gear units to customer-specific solutions.
Rated torque: 3,300 Nm ... 1,400,000 Nm

Planetary Gear Units

With Flender planetary gear units, we provide a range of durable, reliable and finely graduated gear unit solutions. The series wins customers over due to its highly integrated planetary geared motor and maximum conformity with all international motor standards.
It also brings quality and performance in a good ratio of lifecycle costs to price.
Rated torque: 10,000 Nm ... 5,450,000 Nm

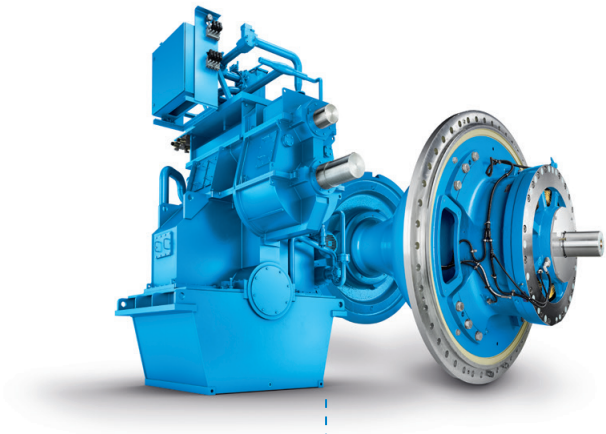

Application-specific gear units

With application-specific gear units, Flender provides by far the most application solutions and thus covers nearly every drive-related need from hundreds of applications in industry and the acquisition of raw materials.
Rated torque: up to 10,000,000 Nm

Customer-specific designs

Our experts are available at any time for special requirements during the development of new products. From designing and simulating complex drive solutions to implementing them, we work together with you to resolve multi-layered tasks.

A

Morskate®
Gedreven door techniek

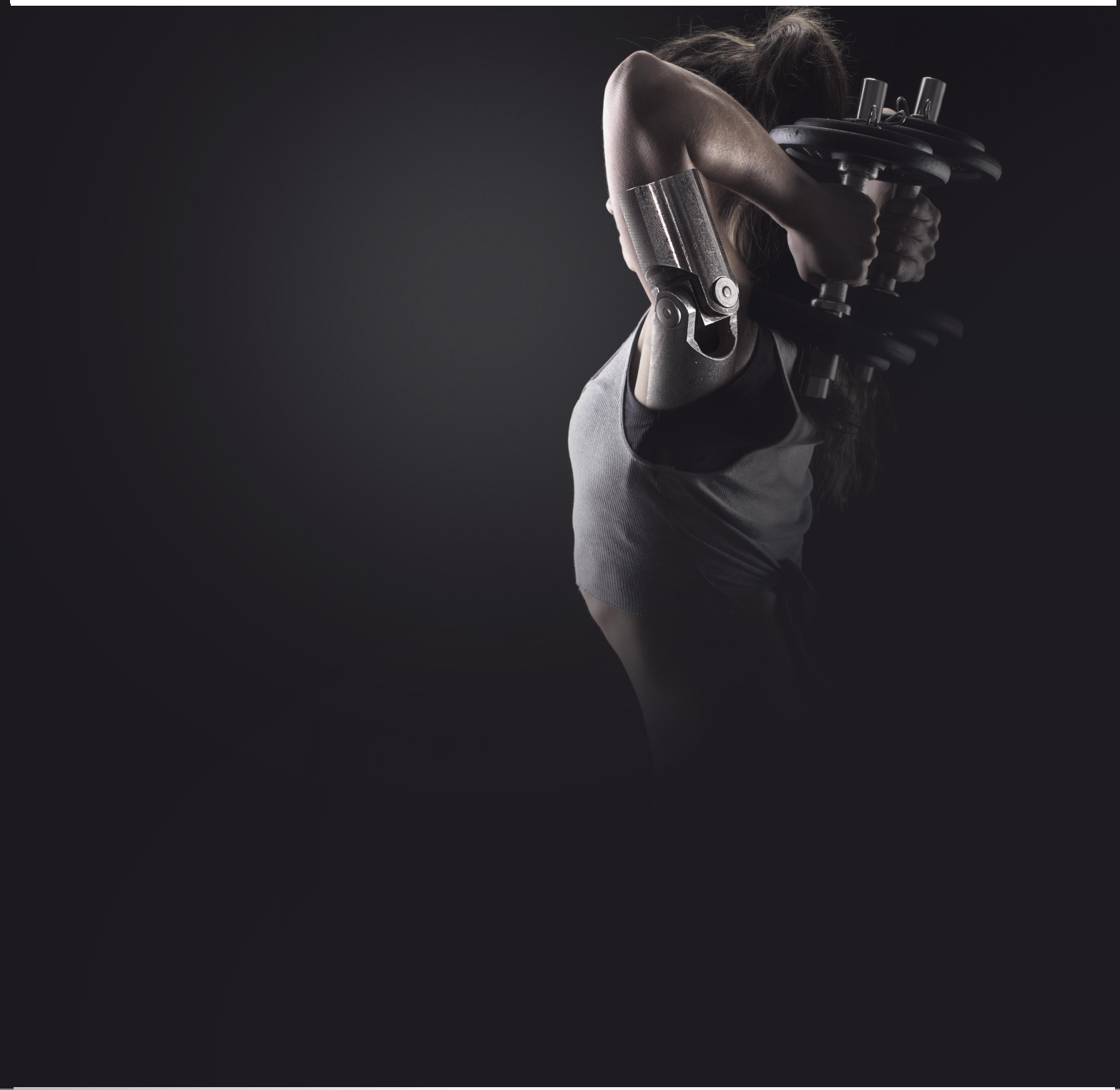

Any questions? Please contact us.

Morskate Aandrijvingen BV
Oosterveldsingel 47A
7558 PJ Hengelo (Ov)
The Netherlands

NL
T +31 (0)74 - 760 11 11
info@morskateaandrijvingen.nl
www.morskateaandrijvingen.nl

DE
T +49 692 - 222 34 95
info@morskateantriebstechnik.de
www.morskateantriebstechnik.de

EN
T +31 (0)74 - 760 11 11
info@morskatedrivetechnology.com
www.morskatedrivetechnology.com